7-INCH AUDIO/VIDEO RECEIVER

iLX-507

HALO9 9-INCH AUDIO/VIDEO RECEIVER

iLX-F509

HALO11 11-INCH AUDIO/VIDEO RECEIVER

iLX-F511

9-INCH SEPARATE AUDIO/VIDEO RECEIVER

i509

EN

FR

ES

- OWNER'S MANUAL
  Please read before using this equipment.
- MODE D'EMPLOI
  Veuillez lire avant d'utiliser cet appareil.
- MANUAL DE OPERACIÓN
  Léalo antes de utilizar este equipo.

ALPS ALPINE NORTH AMERICA, INC.
1500 Atlantic Blvd,
Auburn Hills, Michigan 48326, U.S.A.
Phone 1-800-ALPINE-1 (1-800-257-4631)

ALPINE ELECTRONICS OF AUSTRALIA PTY. LIMITED
161-165 Princes Highway,
Hallam Victoria 3803, Australia
Phone 03-8787-1200

ALPS ALPINE EUROPE GmbH
Ohmstrasse 4, 85716 Unterschleissheim, Germany
Phone: +49 (0) 89-32 42 640
For contact information on your respective country,
please visit www.alpine-europe.com.

ALPS ALPINE EUROPE GmbH
Aurora House, Deltic Avenue
Rooksley, Milton Keynes, MK13 8LW
United Kingdom
Phone: 0345-313-1640

ALPS ALPINE ASIA CO., LTD.
The 9th Towers, Tower B, 24th Floor, Unit TNB01-03,
33/4 Rama 9 road, Huay Kwang, Bangkok, 10310, Thailand
Phone +66 (2) 090 9596

Designed by ALPS ALPINE Japan
68-41657Z86-B (Y_A5)
Model: Music Halo

Thank you for purchasing this Alpine product. Please take a moment to protect your purchase by registering your product now at the following address: www.alpine-usa.com/registration.
You will be informed of product and software updates (if applicable), special promotions, news about Alpine.

Merci d'avoir acheté ce produit Alpine. Nous vous invitons à consacrer un moment à la protection de votre achat en enregistrant votre produit dès maintenant à l'adresse suivante : www.alpine-usa.com/registration.
Vous serez tenu informé des mises à jour des produits et des logiciels (le cas échéant), des promotions spéciales et de l'actualité d'Alpine.

Gracias por adquirir este producto Alpine. Con solo unos pocos pasos podrá proteger su producto, registrándolo a través de la siguiente dirección: www.alpine-usa.com/registration.
Recibirá información sobre nuevos productos y software, promociones especiales y novedades sobre Alpine.

CONTENTS

Operating Instructions

PRECAUTIONS

IMPORTANT INFORMATION 8

WARNING

Points to Observe for Safe Usage 8
WARNING 8
CAUTION 9
NOTICE 10

Getting Started

Location of Controls 12
Turning Power On or Off 13
Adjusting the Volume 13
Lowering Volume Quickly 13
Turning off the screen/button illumination (Display OFF) 13
Touch Screen Operation 13
Switching Sources 14
Selecting an Item in a List 14
About the HOME Screen 14
About the Indicator Display 15

Setup

Setup Operation 16

Device Setup

Displaying Device List 17
Pairing the Bluetooth® Device 17
Connecting the Device Registered in the Device List 18
Disconnecting the Connected Device 18
Deleting a Bluetooth Device from the list 18
Wi-Fi Setup 18
Setting the Wi-Fi Mode 18
Connecting to Wi-Fi Access Point 19
Changing the Wi-Fi password of the unit 20
Bluetooth Setup 20
Setting the Bluetooth 20
Setting the Auto Connection 20
Setting the PIN Code 21
Displaying Device Information 21

Function Setup

Apple CarPlay Setup 21
Adjusting the Media Level 21
Adjusting the Phone Call Volume 22
Adjusting the Ringtones and Alerts Level 22
Adjusting the Notifications and Guidance Level 22
Adjusting the Voice Recognition Level 22
Adjusting the Microphone Level 22
Android Auto Setup 22
Adjusting the Media Level 22
Adjusting the Phone Call Volume 22
Adjusting the Ringtones and Alerts Level 22
Adjusting the Notifications and Guidance Level 23
Adjusting the Voice Recognition Level 23
Adjusting the Microphone Level 23
Radio Setup 23
Adjusting the Radio Volume 23
Setting the Receiving mode 23
Setting the FM Frequency Step 23
Setting the PTY Seek Item 23
SiriusXM Setup 23
Adjusting the SiriusXM Volume 23
USB Setup 24
Adjusting the USB Volume 24
Video Setup 24
iPod Setup 24
Adjusting the iPod Volume 24
AUX (Auxiliary) Setup 24
Adjusting the AUX Volume 24
Setting the Auxiliary (AUX) Name 25
Video Setup 25
HDMI Setup 25
Adjusting the HDMI Volume 25
Setting the HDMI Name 25
Video Setup 25
Setting the HDMI Selector 26
Phone Setup 26
Adjusting the Ringtone Volume 26
Adjusting the Phone Call Volume 26
Adjusting the Microphone Level 26

Setting the Phonebook Transfer....26
Setting the Phonebook Name Order....26
Setting the Phonebook Calendar....26
Bluetooth Audio Setup....27
Adjusting the Bluetooth Audio Volume....27
Factory Audio Setting....27
Setting the OEM SXM....27
Setting the OEM Media....27
Setting the Media....27
Setting the Maestro Module....27
Setting the Vehicle Information....28
Setting the Gauges....28
Setting the Parking Sensor....28
Setting the Climate....28
Dash Cam (Drive Recorder) Setup....28
Display the Dash Cam Menu....28
Video Setup....28
Camera Setup....29
Setting the Reverse Camera (Camera 1)....29
Reverse Camera Format Setting....29
Camera 2 Setup....29
Camera 2 Format Setting....29
Camera Guide Setup....29
Video Setup....30
Setting Audio Mute On/Off while Backing up....30
TIDAL Setup....30
Confirm Login User Name....30
Setting the Streaming Quality....31
Adjusting the TIDAL Volume....31
Logging out of TIDAL....31

System Setup

Adjusting the Key Sound Volume....31
Setting the Microphone Effect....31
Language Setup....32
Adjusting the Clock....32
Setting the Time Format....32
Setting the Time Zone....32
Setting the Daylight Savings Time....32
Setting the Home Screen Type....32
Screen/Lighting Setup....32
Setting the Brightness of the Backlighting (Dimmer)....32
Adjusting the Dimmer of Button Lighting at Night....32
Adjusting the Minimum Level of Backlight....33
Switching the Display Color....33
Editing HOME screen....33
Vehicle Type Setup....33
Steering wheel Setting....33
Fuel Type Setting....33
EV Connector Type Setting....33
Installation Setup....33
About/Software Update iLX-507/iLX-F509/iLX-F511/i509....34
Displaying the Product Information....34
Updating Software Version....34
Dedicated Tuning According to Your Car (Car by Car Update)....34
Displaying Software License....34
Initializing the Sound Settings....34
Initializing the System....34

Sound Setup

Setting the Media Xpander (MX)....35
Equalizer Settings....35
Adjusting the Parametric Equalizer Curve (Advanced EQ/Basic EQ)....35
Equalizer Presets (Preset EQ)....36
Fader/Balance/Rear Speaker/Subwoofer Settings....37
Setting the Fader/Balance....37
Rear Speaker Setting....37
Turning Subwoofer ON/OFF....37
Time Correction Settings....37
Crossover Settings (X-OVER)....38
Setting the "bass engine"....38
Adjusting Bass Level/Treble Level....38
Setting the Subwoofer....39
Adjusting the Subwoofer Level....39
Setting the Subwoofer Phase....39
Defeat Setting....39
About the Crossover....39
About Time Correction....40

Apple CarPlay (Optional)

Access to Apple CarPlay....41
Using Voice Recognition function....41

Android Auto (Optional)

What is Android Auto....42
Activate Android Auto....42
Using Voice Recognition function....42

Radio/HD Radio™/RBDS

Radio Basic Operation

Listening to the Radio 43
Presetting Stations Manually 44
Presetting Stations Automatically 44
Tuning to Preset Station 44
Receiving a Multicast (HD Radio™ Mode only) ... 44
Forced Analog Mode 44
About Ballgame Mode (HD Radio™ Mode only) 44
Displaying Radio Text (HD Radio™/ RBDS FM Radio mode only) 45
About the Feature Logos 45

USB Flash drive (Optional)

USB Audio

Playback 46
Repeat Play 46
Shuffle Play 46
Searching for a Desired Song 47

USB Video

Playback 48
Fast-forwarding/Fast-reversing 48
Repeat Play 48
Shuffle Play 48
Searching for a Desired file 48
Switching Display Modes 49
Switching the Audio Tracks 49

iPod mode on iPhone (Optional)

Playback 50
Searching for a Music File 50
Repeat Play 51
Shuffle Play 51

SiriusXM Satellite Radio Operation (Optional)

SiriusXM Tuner operation: 51
Receiving Channels with the SiriusXM Tuner 52
Selecting the Channel (Linear Tune) 52
Selecting the Channel Directly (Direct Tune) 52
Tuning Channels by Category 53
Checking the SiriusXM Radio ID Number 53
Storing Channel Presets 53
Tuning Channels using Presets 53
Replay Function 54
Listening to the Recommended Channels "For You" 54
Listening to Related Channels 54
Setting Notifications 54
Viewing Listening History 55
Listener Settings 55
Setting Notifications from SiriusXM 55
Managing Notifications 55
Setting Block Explicit 55
Setting Tune Start 55
Resetting History 55
Subscribing to SiriusXM by Phone 56
Displaying the System Information 56
Receiving Support by Phone 56
Setting Your Location 56
Banner advisory messages 56

HDMI Device (Optional)

HDMI Operation 57
Switching the HDMI Input 57
Switching Display Modes 58
RSE through HDMI Out 58

Bluetooth Operation

Setup Before Using 58
About Bluetooth 58
About the Hands-free Phone 58
Before Using Bluetooth 59

Hands-free Phone Control

Answering a Call 59
Hanging up the Telephone 60
Calling 60
Making a phone call using the Phone Menu 60
Phone Operation Screen 60
Adjusting the Speech Volume 60
Changing the Voice Output 61
Muting the Microphone 61
DTMF (Touch-Tone) Function 61
Phone Book Function 61
Searching in the Phone Book 61
Synchronizing the Phone Book 61
Deleting the Phone Book Entries 61

Bluetooth Audio

Playback 62
Repeat Play 62
Shuffle Play 63

Searching for a Desired file....63
Connecting a Bluetooth Device....63
Disconnecting the Bluetooth Connection....63
Switching the connecting Bluetooth Device....63

TIDAL Operation (Optional)

Logging in to TIDAL....64
Playback....65
Adding to the Preset List....65
Recalling from the Preset List....65
Repeat Play....65
Shuffle Play....65
Search....66
Search from My Collection....66
Displaying the Playlist....66
Adding to Favorite Category....67
Adding to Playlists....67
Search for Content Related to the Track Being Played....67
Search for Content Related to the Artist Being Played....68

Auxiliary Device (Optional)

Operating Auxiliary Devices (Optional)....68
Switching Display Modes....69

Camera Operation (Optional)

Rear Camera Operation....69
Displaying the rear view video while the car is in reverse....69
Displaying the Camera Image from the HOME screen....70
Guide Display ON/OFF Setting....70
Adjusting the Caution Display Location....70
Hitch Guide Display ON/OFF Setting....70
About the Rear Camera Guide....71
Switching the Image Pattern for the Rear Camera....72
Front Camera Operation....73
Displaying the Camera Image from the HOME screen....73
Switching the Image Pattern for the Front Camera....73
About the adjustment of guide display ON/OFF setting and adjustment of Caution display location....73
Side Camera Operation....73
About the adjustment of guide display ON/OFF setting and adjustment of Caution display location....73

iDataLink Operation

Access to iDataLink Mode....74
About Parking Sensor screen....75
Factory Media Operation....75
Factory SiriusXM Operation....76

Dash Cam (Drive Recorder) Operation (Optional)

Operating Dash Cam (Optional)....76

Information

Product Software Update....77
About the Supported Formats....77
About MP3/WMA/AAC/FLAC/WAV/APE....77
In Case of Difficulty....79
If this Message Appears....80
Specifications....81

Installation and Connections

WARNING....83
CAUTION....83
Precautions....84
Accessory List....84
Installation....85
Caution concerning the installation location....85
Mounting the Microphone....85
Mounting the GPS Antenna inside the vehicle....86
Note on using HDMI Connection Cables....86
Position Adjustment and Mounting Dimensions of the Display (iLX-F509/iLX-F511 only)....86
Adjusting the display position (iLX-F509/iLX-F511)....87
Installation example using the Original Mounting Bracket....88
Adjust the up-down position of the Display unit (iLX-F509/iLX-F511)....88
Install the display unit (iLX-F509/iLX-F511)....89
Connections....90
Connection 1....90

Connection 2 91
If an ACC power supply is not available 93
System Example 94

LIMITED WARRANTY

PRECAUTIONS

IMPORTANT INFORMATION

FCC COMPLIANCE STATEMENT
This equipment has been tested and found to comply with the limits for a Class B digital device, pursuant to part 15 of the FCC Rules. These limits are designed to provide more reasonable protection against harmful interference in a residential installation, and are more stringent than "outdoor" requirements.

Operation is subjected to the following two conditions: (1) This device may not cause harmful interference, and (2) this device must accept any interference received, including interference that may cause undesired operation.

This equipment generates, uses, and can radiate radio frequency energy and, if not installed and used in accordance with the instructions, may cause harmful interference to radio communications. However, there is no guarantee that interference will not occur in a particular installation. If this equipment does cause harmful interference to radio or television reception, which can be determined by turning the equipment off and on, you are encouraged to try to correct the interference by one of the following measures:

- Reorient or relocate the receiving antenna.
- Increase the separation between the equipment and the receiver.
- Connect the equipment into an outlet on a circuit different from that to which the receiver is connected.
- Consult an experienced radio/TV technician.

WARNING

Points to Observe for Safe Usage

- Read this manual carefully before using this system components. They contain instructions on how to use this product in a safe and effective manner. Alpine cannot be responsible for problems resulting from failure to observe the instructions in this manual.
- This manual uses various pictorial displays to show you how to use this product safely and to alert you to potential dangers resulting from improper connections and operation. Following are the meanings of these pictorial displays. It is important to fully understand the meanings of these pictorial displays in order to use this manual and the system properly.
- This product may be used with software applications. Please follow all usage instructions and warnings when using this product at all times. Do not use this product or any software application in a manner which will hinder safe operation of your vehicle.

⚠ WARNING

- Operation of the system while driving is dangerous. Users should stop vehicle before operating the software.
- Road conditions and regulations take precedence over information contained on the map display: observe actual traffic restrictions and circumstances while driving.
- This software is designed for use exclusively in the unit. It cannot and may not be used in conjunction with other hardware.

⚠ WARNING

This symbol means important instructions. Failure to heed them can result in serious injury or death.

INSTALL THE PRODUCT CORRECTLY SO THAT THE DRIVER CANNOT WATCH TV/VIDEO UNLESS THE VEHICLE IS STOPPED AND THE PARKING BRAKE IS APPLIED.

It is dangerous for the driver to watch TV/Video while driving a vehicle. Installing this product incorrectly enables the driver to watch TV/Video while driving. This may cause a distraction, preventing the driver from looking ahead, thus causing an accident. The driver or other people could be severely injured.

DO NOT WATCH VIDEO WHILE DRIVING.

Watching the video may distract the driver from looking ahead of the vehicle and cause an accident.

DO NOT OPERATE ANY FUNCTION THAT TAKES YOUR ATTENTION AWAY FROM SAFELY DRIVING YOUR VEHICLE.

Any function that requires your prolonged attention should only be performed after coming to a complete stop. Always stop the vehicle in a safe location before performing these functions. Failure to do so may result in an accident.

KEEP THE VOLUME AT A LEVEL WHERE YOU CAN STILL HEAR OUTSIDE NOISES WHILE DRIVING.

Excessive volume levels that obscure sounds such as emergency vehicle sirens or road warning signals (train crossings, etc.) can be dangerous and may result in an accident. LISTENING AT LOUD VOLUME LEVELS IN A CAR MAY ALSO CAUSE HEARING DAMAGE.

MINIMIZE DISPLAY VIEWING WHILE DRIVING.

Viewing the display may distract the driver from looking ahead of the vehicle and cause an accident.

DO NOT DISASSEMBLE OR ALTER.

Doing so may result in an accident, fire or electric shock.

USE ONLY IN CARS WITH A 12 VOLT NEGATIVE GROUND.

(Check with your dealer if you are not sure.) Failure to do so may result in fire, etc.

KEEP SMALL OBJECTS SUCH AS SCREWS OUT OF THE REACH OF CHILDREN.

Swallowing them may result in serious injury. If swallowed, consult a physician immediately.

USE THE CORRECT AMPERE RATING WHEN REPLACING FUSES.

Failure to do so may result in fire or electric shock.

DO NOT BLOCK VENTS OR RADIATOR PANELS.

Doing so may cause heat to build up inside and may result in fire.

USE THIS PRODUCT FOR MOBILE 12V APPLICATIONS.

Use for other than its designed application may result in fire, electric shock or other injury.

MAKE THE CORRECT CONNECTIONS.

Failure to make the proper connections may result in fire or product damage.

BEFORE WIRING, DISCONNECT THE CABLE FROM THE NEGATIVE BATTERY TERMINAL.

Failure to do so may result in electric shock or injury due to electrical shorts.

DO NOT ALLOW CABLES TO BECOME ENTANGLED IN SURROUNDING OBJECTS.

Arrange wiring and cables in compliance with the manual to prevent obstructions when driving. Cables or wiring that obstruct or hang up on places such as the steering wheel, gear lever, brake pedals, etc. can be extremely hazardous.

DO NOT SPLICE INTO ELECTRICAL CABLES.

Never cut away cable insulation to supply power to other equipment. Doing so will exceed the current carrying capacity of the wire and result in fire or electric shock.

DO NOT DAMAGE PIPE OR WIRING WHEN DRILLING HOLES.

When drilling holes in the chassis for installation, take precautions so as not to contact, damage or obstruct pipes, fuel lines, tanks or electrical wiring. Failure to take such precautions may result in fire.

DO NOT USE BOLTS OR NUTS IN THE BRAKE OR STEERING SYSTEMS TO MAKE GROUND CONNECTIONS.

Bolts or nuts used for the brake or steering systems (or any other safety-related system), or tanks should NEVER be used for installations or ground connections. Using such parts could disable control of the vehicle and cause fire etc.

DO NOT INSTALL IN LOCATIONS WHICH MIGHT HINDER VEHICLE OPERATION, SUCH AS THE STEERING WHEEL OR GEARSHIFT.

Doing so may obstruct forward vision or hamper movement etc. and results in serious accident.

⚠ CAUTION

This symbol means important instructions. Failure to heed them can result in injury or material property damage.

HALT USE IMMEDIATELY IF A PROBLEM APPEARS.

Failure to do so may cause personal injury or damage to the product. Return it to your authorized Alpine dealer or the nearest Alpine Service Center for repairing.

HAVE THE WIRING AND INSTALLATION DONE BY EXPERTS.

The wiring and installation of this unit requires special technical skill and experience. To ensure safety, always contact the dealer where you purchased this product to have the work done.

USE SPECIFIED ACCESSORY PARTS AND INSTALL THEM SECURELY.

Be sure to use only the specified accessory parts. Use of other than designated parts may damage this unit internally or may not securely install the unit in place. This may cause parts to become loose resulting in hazards or product failure.

ARRANGE THE WIRING SO IT IS NOT CRIMPED OR PINCHED BY A SHARP METAL EDGE.

Route the cables and wiring away from moving parts (like the seat rails) or sharp or pointed edges. This will prevent crimping and damage to the wiring. If wiring passes through a hole in metal, use a rubber grommet to prevent the wire's insulation from being cut by the metal edge of the hole.

DO NOT INSTALL IN LOCATIONS WITH HIGH MOISTURE OR DUST.

Avoid installing the unit in locations with high incidence of moisture or dust. Moisture or dust that penetrates into this unit may result in product failure.

⚠ NOTICE

Product Cleaning

Use a soft dry cloth for periodic cleaning of the product. For more severe stains, please dampen the cloth with water only. Anything else has the chance of dissolving the paint or damaging the plastic.

Temperature

Be sure the temperature inside the vehicle is between +45°C (+113°F) and 0°C (+32°F) before turning your unit on.

Maintenance

If you have problems, do not attempt to repair the unit yourself. Return it to your Alpine dealer or the nearest Alpine Service Station for servicing.

Protecting the USB connector

- Only an iPhone or USB flash drive can be connected to the USB connector on this unit. Correct performance using other USB products cannot be guaranteed.
- If the USB connector is used, be sure to use only the supplied connector cable with the unit. A USB hub is not supported.
- Depending on the connected USB flash drive, the unit may not function or some functions may not be performed.
- The audio file formats that can be played on the unit is MP3/WMA/AAC/FLAC/WAV/APE.
- Artist/song name, etc., can be displayed. Certain, special characters may not be correctly displayed.

⚠ CAUTION

Alpine accepts no responsibility for lost data, etc., even if data, etc., is lost while using this product.

On Handling USB Flash drive

- This unit can control a memory storage device that supports the USB Mass Storage Class (MSC) protocol. Playable audio file formats are MP3, WMA, AAC, FLAC, WAV and APE.
- USB Flash drive function is not guaranteed. Use a USB flash drive according to the terms of agreement. Read the USB flash drive Owner's Manual thoroughly.
- Avoid usage or storage in the following locations:
  Anywhere in the car exposed to direct sunlight or high temperatures.
  Anywhere the possibility of high humidity or corrosive substances are present.
- Fix the USB flash drive in a location where driver operation will not be hindered.
- USB Flash drive may not function correctly at high or low temperature.
- Use only certified USB flash drive. Note that even certified USB flash drive, may not function correctly depending on its type or state.
- Depending on the settings of the USB flash drive type, memory state or encoding software, the unit may not play back or display properly.
- USB Flash drive may take time to start playback. If there is a particular file other than audio in the USB flash drive, it may take considerable time before the file is played back or searched.
- The unit can play back "mp3," "wma," "m4a," "flac," "fla," "wav," and "ape" file extensions.
- Do not add the above extensions to a file other than audio data. This non-audio data will not be recognized. The resulting playback may contain noise that can damage speakers and/or amplifiers.
- It is recommended to back up important data on a personal computer.
- Do not remove the USB device while playback is in progress. Change SOURCE to something other than USB, then remove the USB device to prevent possible damage to its memory.

- Windows Media, and the Windows logo are trademarks, or registered trademarks of Microsoft Corporation in the United States and/or other countries.
- Apple, iPhone, iPod, Lightning and Siri are trademarks of Apple Inc., registered in the U.S. and other countries. Apple CarPlay is a trademark of Apple Inc.
- Use of the Made for Apple and Works with Apple badges means that an accessory has been designed to connect specifically to the Apple product(s) identified in the Made for Apple badge and to work specifically with the technology identified in the Works with Apple badge, and has been certified by the developer to meet Apple performance standards. Apple is not responsible for the operation of this device or its compliance with safety and regulatory standards.
  Please note that the use of this accessory with an Apple product may affect wireless performance.
- Use of the Apple CarPlay logo means that a vehicle user interface meets Apple performance standards. Apple is not responsible for the operation of this vehicle or its compliance with safety and regulatory standards. Please note that the use of this product with iPhone may affect wireless performance.
- Google, Android, Google Play and Android Auto are trademarks of Google LLC.
  To use Android Auto on your car display, you'll need an Android phone running Android 6.0 or higher, an active data plan, and the Android Auto app.
- HD Radio Technology manufactured under license from iBiquity Digital Corporation. U.S. and Foreign Patents. For patents see http://dts.com/patents. HD Radio and the HD, HD Radio, and "ARC" logos are registered trademarks or trademarks of iBiquity Digital Corporation in the United States and/or other countries.
- Sirius, XM and all related marks and logos are trademarks of Sirius XM Radio Inc. All rights reserved.
- The terms HDMI and HDMI High-Definition Multimedia Interface, and the HDMI Logo are trademarks or registered trademarks of HDMI Licensing Administrator, Inc. in the United States and other countries.
- The Bluetooth® word mark and logos are registered trademarks owned by the Bluetooth SIG, Inc. and any use of such marks by ALPS ALPINE Co., LTD. is under license.
- The Wi-Fi CERTIFIED™ Logo is a registered trademark of Wi-Fi Alliance®.
- LDAC and LDAC logo are trademarks of Sony Corporation.
- The product with this logo is conformed to High-Resolution Audio standard defined by Japan Audio Society. This logo is used under license from Japan Audio Society.
- MQA and the Sound Wave Device are registered trade marks of MQA Limited © 2016.

Made for iPhone SE (2nd generation), iPhone 11 Pro Max, iPhone 11 Pro, iPhone 11, iPhone XS Max, iPhone XS, iPhone XR, iPhone X, iPhone 8 Plus, iPhone 8, iPhone 7 Plus, iPhone 7, iPhone SE, iPhone 6s Plus, iPhone 6s.

Getting Started

Location of Controls

■ iLX-507

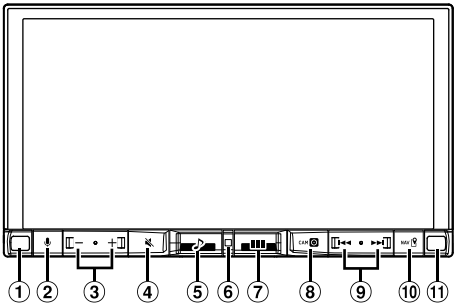

■ iLX-F509/iLX-F511

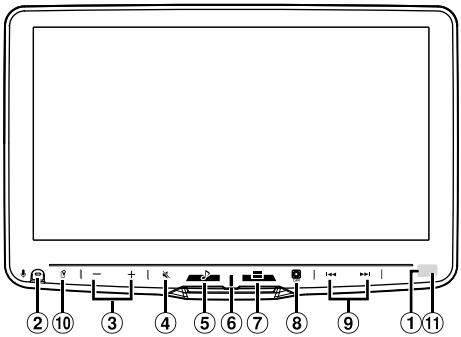

① **Dimmer Sensor**
Senses the brightness of the car interior.

② **button**
Activate Siri function or voice recognition mode while Apple CarPlay or Android Auto is connected.

③ **− / + (DOWN/UP) button**
Adjusts the volume.

④ **(MUTE) button**
Activates/deactivates MUTE mode.
Press and hold this button for at least 2 seconds to turn off the screen/button illumination.

⑤ **(Audio) button**
Displays the Audio playback screen.
Audio sources can be switched while the Audio playback screen is displayed.
- When displaying a screen different from the audio source (such as the map screen for Apple CarPlay or Android Auto), the audio source is switched without changing the screen display.

⑥ **Power indicator**

⑦ **(HOME) button**
Displays the HOME screen.
The Sound Setup screen is displayed while the HOME screen is displayed.
Press and hold this button for at least 2 seconds to turn the power off.

⑧ **(CAM) button**
Displays the image of Camera2 (Front/Side/Other) or Camera1 (Rear).
Press for 1 second or more to return to the previous screen.

⑨ **/ button**
Press to seek up/down a station in radio mode or up/down a track, etc., in other audio/visual sources.

⑩ **(MAP) button**
Displays the map screen for Apple CarPlay / Android Auto when Apple CarPlay or Android Auto is connected.

⑪ **Remote Sensor**
Point the remote control transmitter towards the remote sensor within a range of 2 meters.

About the button descriptions used in this Owner's Manual
The buttons found on the face of the unit are expressed in bold (e.g. **(HOME)**). The buttons found on the touch-screen display are shown in bold within brackets, [ ] (e.g. [**OK**]).

CAUTION

■ iLX-F509/iLX-F511 only

To adjust the display angle, hold the center of the top and bottom of the display to move it. To protect the display, do not hold the left and right ends to move it.

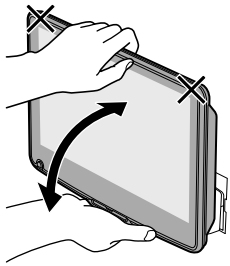

Turning Power On or Off

When the ignition key is turned to ACC or ON, the opening screen will be automatically displayed.

1 Turn the ignition key to the ACC or ON position.

The unit turns on.

- When using the system for the first time, the HOME screen is displayed.
- When turned on, the unit displays the last screen that was displayed before the ignition key was turned off. For example, if the unit is in radio mode when ignition is turned off, it will remain in radio mode when ignition is turned back on.

2 To turn the unit to off, turn the ignition key to the OFF position.

- *The unit is a precision device. Careful handling of the unit should provide you with years of trouble-free operation.*
- *Some of this unit's functions cannot be performed while the vehicle is in motion. Be sure to stop your vehicle in a safe location and apply the parking brake before attempting these operations.*

Adjusting the Volume

Adjust the volume by touching – / +.

Volume decreases/increases continuously by touching and holding – / +.
Volume: 0 to 35

Lowering Volume Quickly

Audio Mute function instantly lowers the volume level to 0.

1 Press the 🔇 (MUTE) button to activate MUTE mode.

The audio level will be 0 and the mute indicator will flash.

2 Press the 🔇 (MUTE) button again to bring the audio back to previous volume level.

Turning off the screen/button illumination (Display OFF)

You can turn off the screen and button illumination without changing the audio output.

1 Press and hold the 🔇 (MUTE) button for at least 2 seconds.

The screen/button illumination is turned off.

2 To cancel Display OFF mode, press and hold the 🔇 (MUTE) button for at least 2 seconds or touch the screen.

- *When there is an interrupt such as an incoming hands-free call, Display OFF is canceled.*

Touch Screen Operation

You can operate the unit by using the touch panel display.

- *Be sure to touch the onscreen button lightly with the pad of your finger to avoid scratching the display.*

Touch operation

Touch a button or list item on the screen lightly.

- *If you touch a button and there is no reaction, lift your finger.*
- *Onscreen buttons that cannot be operated are dimmed.*

Swipe operation

Move your finger lightly with a swipe.

Switching Sources

1 Press the ⊞ (HOME) button.

The HOME screen is displayed.

2 Touch your desired source icon.

- *You can change the audio source icon location on the screen. For details, see "Editing HOME screen" (page 33).*

Selecting an Item in a List

To scroll through a list, perform the following operations.

Touch the screen and slide your finger up and down.

The screen will scroll along with your finger movement.

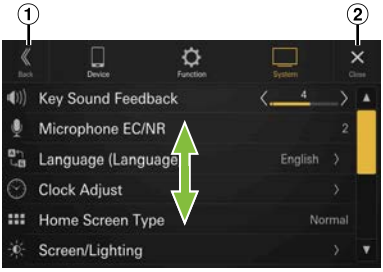

① Returns to the previous screen.

② Closes the window.

- *After touching the screen, move your finger away from the screen before dragging and that item will be selected.*

About the HOME Screen

In the HOME screen, select the audio source to perform various settings and operations of the function.

- *The HOME screen can be switched between Normal mode and Enhanced Text mode. For details, see "Setting the Home Screen Type" (page 32).*

Press the ⊞ (HOME) button.

The HOME screen is displayed.

■ **Normal mode screen example**

■ **Enhanced Text mode screen example**

① Touch to display the Sound Setup screen.
- The Sound Setup screen can also be displayed by pressing the ⊞ (HOME) button while the HOME screen is displayed.

② Touch to change the page.
- Pages can also be changed by swiping the HOME screen horizontally with your finger.

③ Audio source select area
Touch your desired source icon to change the audio source.
- The order of source icons can be changed. For details, see "Editing HOME screen" (page 33).

④ HOME screen navigation

⑤ Thumbnail window for the current source
Source name, artwork and title information are displayed. Touch the artwork to display the source screen. Touch [▶II] to play/pause a track or video.

About the Indicator Display

The Indicator Bar at the top of the screen displays various types of information, like the current time.

① Phone shortcut button
The Device List screen is displayed when a Phone, CarPlay or Android Auto device is not connected.
The hands-free phone screen (Recent Call, Phone Book, Keypad) is displayed when the hands-free phone is connected. The screen of the previous logout is displayed.
The Apple CarPlay screen is displayed while Apple CarPlay is connected.
The Android Auto screen is displayed while Android Auto is connected.

② Lights up when connecting the hands-free phone ① via Bluetooth. (Does not display when connection is set to OFF.)

③ Indicates the battery level of the connected hands-free phone ①.

No Battery	Level 1	Level 2	Level 3	Level 4	Level 5

- This may not be displayed for the hands-free phone ②.

④ Indicates the Bluetooth signal strength level of the connected hands-free phone ①.
Displayed when Bluetooth setting is ON.

0	1	2	3	4	5

- This may not be displayed for the hands-free phone ②.

⑤ Lights up when connecting the audio device via Bluetooth. (Does not display when connection is set to OFF.)

⑥ Lights up when connecting the hands-free phone ② via Bluetooth. (Does not display when connection is set to OFF.)

⑦ Indicates a Wi-Fi signal strength level when connected to a Wi-Fi access point with a valid internet connection.

0	1	2	3	4

⑧ Lights up when connecting a separately sold ALPINE KNOB (RUX-H02) via Bluetooth. You can use the RUX-H02 to adjust the volume level and sound quality (Bass Level, etc.) of this unit. For details, refer to the Owner's Manual of RUX-H02.

⑨ Indicates the current time.
Touch to turn ON/OFF the clock display.
You can switch between the 12 hour display and 24 hour display options (page 32).

Setup

Setup Operation

To display the Setup Menu screen:
Your vehicle must be parked with the ignition key in the ACC or ON position. To do this, follow the procedures below.

1 Bring your vehicle to a complete stop at a safe location. Engage the parking brake.
2 Release the parking brake. (For safety, release the parking brake while depressing the foot brake pedal).
3 Engage the parking brake again.

- For automatic transmission vehicles, place the transmission lever in the Park position.

Now, the locking system for the Setup operation has been released. Engaging the parking brake can reactivate the Setup Menu, as long as the car's ignition has not been turned off. It is not necessary to repeat the above procedure (1 through 3).

Each time the ignition is turned OFF, perform the above procedure.

1 Press the ⊞ (HOME) button.

The HOME screen is displayed.

[Setup] button

2 Touch [Setup].

The Settings menu screen is displayed.

3 Touch the required setting category on the upper part of the Settings menu screen, and then touch the setting item.

Setting categories:

Device: See "Device Setup" (page 17)
Function: See "Function Setup" (page 21)
System: See "System Setup" (page 31)

Device Setup

[Device] is selected on the Settings menu screen.

■ Device Setup Menu screen

Setting items:
Device List (page 17)
Wi-Fi (page 18)
Bluetooth (page 20)
Device Info. (page 21)

Displaying Device List

[Device List] is selected on the Device Setup menu screen.

The list of devices registered or connected to this unit is displayed. 10 devices compatible with Bluetooth and Wi-Fi, and 1 device compatible with Apple CarPlay or Android Auto connected via USB, can be displayed.

■ Device List screen example

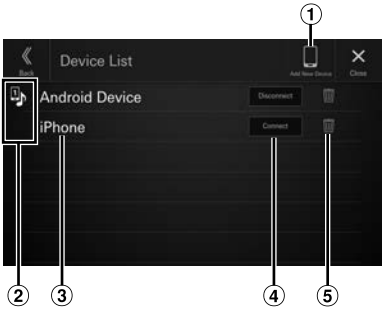

① Add New Device
Search for Bluetooth compatible devices. For details, see "Pairing the Bluetooth Device" (page 17).

② Function icon
: Hands Free1
: Hands Free2
: Bluetooth Audio
: Hands Free1 + Bluetooth Audio
: Hands Free2 + Bluetooth Audio
: Apple CarPlay
: Android Auto

③ Device Name or Device Address

④ Connect or disconnect the selected device. For details, see "Connecting the Device Registered in the Device List", "Disconnecting the Connected Device" (page 18).

⑤ Delete the selected device information. For details, see "Deleting a Bluetooth Device from the list" (page 18).

Pairing the Bluetooth® Device

Search for Bluetooth compatible devices.

Setting item:
Add New Device

1 Touch [Add New Device].

A search for devices to connect wirelessly to the unit starts.
The Search List is displayed, and the list of searched devices is displayed.

2 Touch a device to connect in the list.

3 When a code is displayed on the device, check that the code is the same as the one on the screen of the unit, and touch [Yes].

When the device connection is complete, a message appears and the device returns to normal mode.

Connecting the Device Registered in the Device List

Select one of 10 paired Bluetooth or Wi-Fi compatible devices that you previously registered.

- *If you want to use Apple CarPlay or Android Auto with a wireless connection, set the "Wi-Fi Mode" setting to [**Phone Link Mode**]. For details, see "Setting the Wi-Fi Mode" (page 18). Also, set the Wi-Fi function of your iPhone or Android smartphone to "On".*

1 Touch [Connect] of the device you want to connect from the Paired Device list.

The Function Select screen is displayed.

2 Select the function of the connecting device on the Select Function screen, and touch [OK].

A check mark is displayed for the selected function.

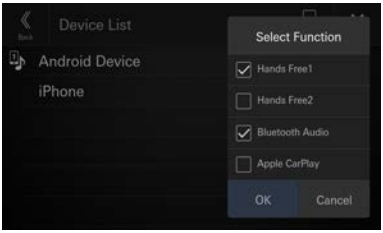

Hands Free1:	The device is used as the first hands-free phone or Android Auto.
Hands Free2:	The device is used as the second hands-free phone or Android Auto.
Bluetooth Audio:	The device is used as a Bluetooth Audio device.
Apple CarPlay*:	The device is used as Apple CarPlay.
Android Auto*:	The device is used as Android Auto.

* If you want to use Apple CarPlay or Android Auto mode without displaying [**Apple CarPlay**] or [**Android Auto**] on the Select Function screen, select [**Hands Free1**] or [**Hands Free2**] to connect your device.

- For example, when the device is used as a hands-free phone and Bluetooth Audio, select [**Hands Free1**] and [**Bluetooth Audio**].

When the device connection is complete, a message appears and the device returns to normal mode.

Disconnecting the Connected Device

Touch [Disconnect] of the device you want to disconnect from the Paired Device list.

The device is disconnected.

Deleting a Bluetooth Device from the list

You can delete the information of a previously connected Bluetooth compatible device.

1 Touch [🗑] (Delete) of the Bluetooth compatible device to delete from the Paired Device list.

2 Touch [Yes].

- Touching [**No**] will cancel the setting.

Wi-Fi Setup

[Wi-Fi] is selected on the Device Setup menu screen.

Setting the Wi-Fi Mode

Set the Wi-Fi mode according to the environment in which Wi-Fi is used.

Setting item:
Wi-Fi Mode

Setting contents:
OFF (Initial setting) / Internet Mode / Phone Link Mode

OFF:	Wi-Fi is Off.
Internet Mode:	Select this item when connecting to a Wi-Fi access point with an internet connection and using TIDAL. When the Internet Mode is selected, the Wi-Fi Management setting is enabled. For details, see "Connecting the Wi-Fi Access Point" (page 19).
Phone Link Mode:	Select this item to use Apple CarPlay or Android Auto with a wireless connection. When the Phone Link Mode is selected, the PSK for Phone Link setting is enabled. For details, see "Changing the Wi-Fi password of the unit" (page 20).

- *Wireless Apple CarPlay and Android Auto are not available when the Internet Mode is selected. If you want to use a device that works with an internet connection (such as TIDAL) and Apple CarPlay/Android Auto at the same time, connect your iPhone or smartphone via USB.*

Connecting to Wi-Fi Access Point

To use TIDAL, it is necessary to connect to a Wi-Fi access point with a valid internet connection.

- *Available only when "Wi-Fi Mode" setting is [***Internet Mode***] (page 18).*

∗ Data rates may apply. Please check with your carrier for details.

Setting item:
Wi-Fi Management

1 Touch to select [Wi-Fi Management].

The Wi-Fi Access Point List screen is displayed.

2 Touch to select [Search].

Search for the Wi-Fi access point. Once the search is finished, the New Wi-Fi Access Points screen is displayed.

- The connected access points are not displayed on the search screen.

3 Touch to select the access point in the list to connect.

The password input screen is displayed.

- When you touch [**Add Network**] on the Wi-Fi New Access Points screen, you can connect to a new access point by manually entering the SSID, security and password for the access point. 1 to 32 characters can be input for the SSID, and 8 to 64 characters for the password. If [**None**] is entered for security, password input is not required.

4 Enter a password, then touch to select [DONE].

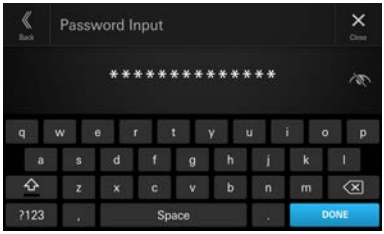

- Touch [⌫] to delete an entered number.

5 Touch to select [OK].

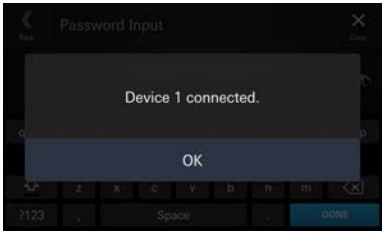

When the access point connection is complete, the Wi-Fi Access Point List screen is displayed.

■ **Wi-Fi Access Point List screen example**

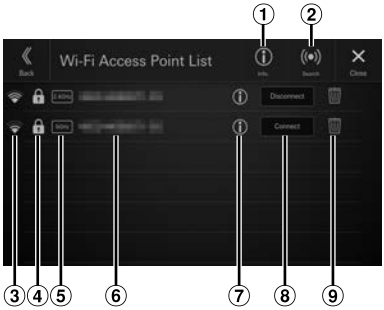

① Info.
Touch to display the MAC address and IP address of this unit.

② Search
Search for Wi-Fi access points. For details, see "Connecting the Wi-Fi Access Point" (page 19).

③ Signal strength of the access point

④ Security prompt (None/WEP/WPA/WPA2/WPA3) of the access point

⑤ Band display of the access point

⑥ SSID of the access point

⑦ Display detailed information on the access point

⑧ Connect or disconnect the selected Wi-Fi access point. For details, see "Connecting an Access Point registered in the Wi-Fi Access Point List", "Disconnecting the Connected Access Point" (page 20).

⑨ Delete the selected Wi-Fi access point. For details, see "Deleting the Access Point from the list" (page 20).

Connecting an Access Point registered in the Wi-Fi Access Point List

Select a Wi-Fi access point from a registered list.

Touch [Connect] of the access point you want to connect from the Wi-Fi Access Point List.

Wi-Fi connection will start.

Disconnecting the Connected Access Point

Touch [Disconnect] of the access point you want to disconnect from the Wi-Fi Access Point List.

The access point is disconnected.

Deleting the Access Point from the list

You can delete the information of a previously connected access point.

1 Touch [🗑] (Delete) of the access point to delete from the Wi-Fi Access Point List.

2 Touch [OK].

- Touching [**Cancel**] will cancel the setting.

Changing the Wi-Fi password of the unit

You can randomly change the Wi-Fi password (PSK) of the unit.

- *Available only when "Wi-Fi Mode" setting is [**Phone Link Mode**] (page 18).*

Setting item:
PSK for Phone Link

Touch [↻] of "PSK for Phone Link".

The Wi-Fi password (PSK) is changed.

- *This password is generated on this product. You cannot create a new password.*

Bluetooth Setup

[Bluetooth] is selected on the Device Setup menu screen.

Setting the Bluetooth

Set to **[On]** when connecting the unit to the Bluetooth compatible device.

Setting item:
Bluetooth

Touch [◯] (Off) or [◯] (On) of "Bluetooth".

Setting the Auto Connection

You can connect the last connected device automatically.

Setting item:
Auto Connection

Touch [◯] (Off) or [◯] (On) of "Auto Connection".

Setting the PIN Code

You can set the PIN code for connecting with a Bluetooth compatible device.

Setting item:
Bluetooth PIN Code

1 Touch [Bluetooth PIN Code].

A numeric keypad screen is displayed.

2 Touch [Delete All].

The displayed PIN code is cleared, then you can enter the new PIN code.

3 Enter a 4-digit passcode, and then touch [OK].

- The initial number is 0000.
- Touch [⌫] to delete an entered number.
- Touch **[Delete All]** to delete all entered numbers.

Displaying Device Information

You can display the Bluetooth or Wi-Fi device name and device address of this unit.

Setting item:
Device Info

Function Setup

[Function] is selected on the Settings menu screen.

■ Function Setup Menu screen

Setting items:
Apple CarPlay (page 21)
Android Auto (page 22)
Radio (page 23)
SiriusXM (page 23)
USB (page 24)
iPod (page 24)
Auxiliary (page 24)
HDMI (page 25)
Phone (page 26)
Bluetooth Audio (page 27)
Factory Audio (page 27)
Dash Cam (page 28)
Camera (page 29)
TIDAL (page 30)

Apple CarPlay Setup

[Apple CarPlay] is selected on the Function Setup Menu screen.

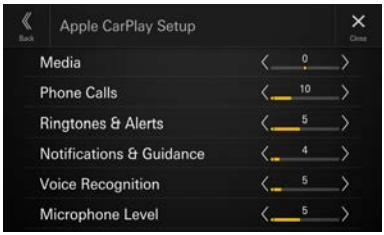

Adjusting the Media Level

Setting item:
Media
Setting level:
-14 to +14 (Initial setting: 0)

Touch [<] or [>] of "Media" to set the media volume level for CarPlay playback.

Adjusting the Phone Call Volume

Setting item:
Phone Calls
Setting level:
1 to 35 (Initial setting: 5)

Touch [<] or [>] of "Phone Calls" to set the call volume level.

Adjusting the Ringtones and Alerts Level

Setting item:
Ringtones & Alerts
Setting level:
1 to 11 (Initial setting: 5)

Touch [<] or [>] of "Ringtones & Alerts" to set the volume level for ringtones and alerts.

Adjusting the Notifications and Guidance Level

Setting item:
Notifications & Guidance
Setting level:
1 to 35 (Initial setting: 10)

Touch [<] or [>] of "Notifications & Guidance" to set the volume level for notifications and guidance.

Adjusting the Voice Recognition Level

Setting item:
Voice Recognition
Setting level:
1 to 35 (Initial setting: 10)

Touch [<] or [>] of "Voice Recognition" to set the volume level for voice recognition.

Adjusting the Microphone Level

Setting item:
Microphone Level
Setting level:
1 to 11 (Initial setting: 5)

Touch [<] or [>] of "Microphone Level" to set the microphone volume level.

Android Auto Setup

[Android Auto] is selected on the Function Setup Menu screen.

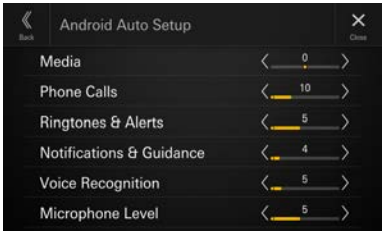

Adjusting the Media Level

Setting item:
Media
Setting level:
-14 to +14 (Initial setting: 0)

Touch [<] or [>] of "Media" to set the media volume level for Android Auto playback.

Adjusting the Phone Call Volume

Setting item:
Phone Calls
Setting level:
1 to 35 (Initial setting: 5)

Touch [<] or [>] of "Phone Calls" to set the call volume level.

Adjusting the Ringtones and Alerts Level

Setting item:
Ringtones & Alerts
Setting level:
1 to 11 (Initial setting: 5)

Touch [<] or [>] of "Ringtones & Alerts" to set the volume level for ringtones and alerts.

Adjusting the Notifications and Guidance Level

Setting item:
Notifications & Guidance
Setting level:
1 to 35 (Initial setting: 10)

Touch [<] or [>] of "Notifications & Guidance" to set the volume level for notifications and guidance.

Adjusting the Voice Recognition Level

Setting item:
Voice Recognition
Setting level:
1 to 35 (Initial setting: 10)

Touch [<] or [>] of "Voice Recognition" to set the volume level for voice recognition.

Adjusting the Microphone Level

Setting item:
Microphone Level
Setting level:
1 to 11 (Initial setting: 5)

Touch [<] or [>] of "Microphone Level" to set the microphone volume level.

Radio Setup

[Radio] is selected on the Function Setup Menu screen.

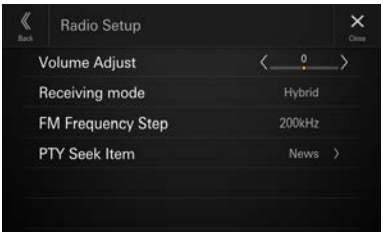

Adjusting the Radio Volume

Setting item:
Volume Adjust
Setting level:
-14 to +14 (Initial setting: 0)

Touch [<] or [>] of "Volume Adjust" to set the radio volume level.

Setting the Receiving mode

Receiving mode can be set for FM radio reception.

Setting item:
Receiving mode
Setting contents:
Hybrid (Initial setting) / Forced Analog

Hybrid:	Automatically switches to analog reception to reduce noise when there is a large amount of noise due to poor reception.
Forced Analog:	Unit is forced to receive analog signals.

Setting the FM Frequency Step

During manual tuning, you can select the frequency step for FM analog radio station searching.

Setting item:
FM Frequency Step
Setting contents:
100kHz / 200kHz (Initial setting)

Setting the PTY Seek Item

Set the program item received by PTY Seek.

Setting item:
PTY Seek Item
Setting contents:
News (Initial setting) / Information / Sports / Talk / Rock / Classic Rock / Adult Hits / Soft Rock / Top 40 / Country / Oldies / Soft / Nostalgia / Jazz / Classical / Rhythm and Blues / Soft R & B / Foreign Language / Religious Music / Religious Talk / Personality / Public / College / Weather

SiriusXM Setup

[SiriusXM] is selected on the Function Setup Menu screen.

Adjusting the SiriusXM Volume

Setting item:
Volume Adjust
Setting level:
-14 to +14 (Initial setting: 0)

Touch [<] or [>] of "Volume Adjust" to set the SiriusXM volume level.

USB Setup

[USB] is selected on the Function Setup Menu screen.

Adjusting the USB Volume

Setting item:
Volume Adjust
Setting level:
-14 to +14 (Initial setting: 0)

Touch [<] or [>] of "Volume Adjust" to set the volume level for USB Audio/USB Video playback.

Video Setup

Setting item:
Video Setup

Touch [<] or [>] of "Brightness, Color, Contrast" to set the picture quality.

- *Available only when the current source is USB Video.*

Adjusting Brightness

Setting item:
Brightness
Setting contents:
-15 to +15 (Initial setting: 0)

Adjusting Color of Picture

Setting item:
Color
Setting contents:
0 to 2 (Initial setting: 0)

Adjusting Image Contrast

Setting item:
Contrast
Setting contents:
-15 to +15 (Initial setting: 0)

iPod Setup

[iPod] is selected on the Function Setup Menu screen.

Adjusting the iPod Volume

Setting item:
Volume Adjust
Setting level:
-14 to +14 (Initial setting: 0)

Touch [<] or [>] of "Volume Adjust" to set the volume level for iPod playback.

AUX (Auxiliary) Setup

[Auxiliary] is selected on the Function Setup Menu screen.

Adjusting the AUX Volume

Setting item:
Volume Adjust
Setting level:
-14 to +14 (Initial setting: 0)

Touch [<] or [>] of "Volume Adjust" to set the volume level for AUX playback.

Setting the Auxiliary (AUX) Name

Set the display name of an external device. This name is displayed as a source name on the HOME screen or Audio screen.

Setting item:
AUX Name
Setting contents:
Off / Auxiliary (Initial setting) / Digital TV

- *Not available when the current source is Auxiliary (or Digital TV).*

Video Setup

Setting item:
Video Setup

Touch [<] or [>] of "Brightness, Color, Contrast" to set the picture quality.

- *Available only when the current source is Auxiliary (or Digital TV).*

Adjusting Brightness

Setting item:
Brightness
Setting contents:
-15 to +15 (Initial setting: 0)

Adjusting Color of Picture

Setting item:
Color
Setting contents:
0 to 2 (Initial setting: 0)

Adjusting Image Contrast

Setting item:
Contrast
Setting contents:
-15 to +15 (Initial setting: 0)

HDMI Setup

[HDMI] is selected on the Function Setup Menu screen.

Adjusting the HDMI Volume

Setting item:
Volume Adjust
Setting level:
-14 to +14 (Initial setting: 0)

Touch [<] or [>] of "Volume Adjust" to set the volume level for HDMI playback.

Setting the HDMI Name

Set the display name of an external device connected via HDMI.

Setting item:
HDMI Name
Setting contents:
Off / HDMI (Initial setting) / Digital TV

- *Not available when the current source is HDMI (or Digital TV).*

Video Setup

Setting item:
Video Setup

Touch [<] or [>] of "Brightness, Color, Contrast" to set the picture quality.

- *Available only when the current source is HDMI (or Digital TV).*

Adjusting Brightness

Setting item:
Brightness
Setting contents:
-15 to +15 (Initial setting: 0)

Adjusting Color of Picture

Setting item:
Color
Setting contents:
0 to 2 (Initial setting: 0)

Adjusting Image Contrast

Setting item:
Contrast
Setting contents:
-15 to +15 (Initial setting: 0)

Setting the HDMI Selector

Set to [**On**] when the optional HDMI Selector is connected.

Setting item:
HDMI selector

Touch [ ] (Off) or [ ] (On) of "HDMI selector".

Phone Setup

[Phone] is selected on the Function Setup Menu screen.

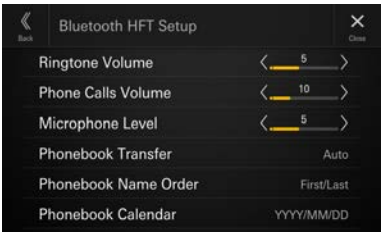

Adjusting the Ringtone Volume

Setting item:
Ringtone Volume
Setting level:
1 to 11 (Initial setting: 5)

Touch [<] or [>] of "Ringtone Volume" to set the Ringtones volume level.

- *Not available when Apple CarPlay or Android Auto is connected.*

Adjusting the Phone Call Volume

Setting item:
Phone Calls Volume
Setting level:
1 to 35 (Initial setting: 5)

Touch [<] or [>] of "Phone Calls Volume" to set the call volume level.

- *Not available when Apple CarPlay or Android Auto is connected.*

Adjusting the Microphone Level

Setting item:
Microphone Level
Setting level:
1 to 11 (Initial setting: 5)

Touch [<] or [>] of "Microphone Level" to set the microphone volume level.

- *Not available when Apple CarPlay or Android Auto is connected.*

Setting the Phonebook Transfer

Set whether to transfer the phonebook automatically.

Setting item:
Phonebook Transfer
Setting contents:
Auto (Initial setting) / Manual

Setting the Phonebook Name Order

Set the order of the last name and first name displayed in the phonebook.

Setting item:
Phonebook Name Order
Setting contents:
Last/First / First/Last (Initial setting)

Setting the Phonebook Calendar

Set the date format displayed in the phonebook.

Setting item:
Phonebook Calendar
Setting contents:
YYYY/MM/DD (Initial setting) / MM/DD/YYYY / DD/MM/YYYY

Bluetooth Audio Setup

[**Bluetooth Audio**] is selected on the Function Setup Menu screen.

Adjusting the Bluetooth Audio Volume

Setting item:
Volume Adjust
Setting level:
-14 to +14 (Initial setting: 0)

Touch [<] or [>] of "Volume Adjust" to set the volume level for Bluetooth Audio playback.

Factory Audio Setting

[Factory Audio] is selected on the Function Setup Menu screen.

Setting the OEM SXM

Set to **[On]** when operating the factory SiriusXM on the unit.

Setting item:
OEM SXM

Touch [ ] (Off) or [ ] (On) of "OEM SXM".

Adjusting the OEM SiriusXM Volume

Setting item:
Volume Adjust
Setting level:
-14 to +14 (Initial setting: 0)

Touch [<] or [>] of "Volume Adjust" to set the factory SiriusXM volume level.

Setting the OEM Media

Set to **[On]** when operating factory media (USB Audio/iPod Audio) on the unit.

Setting item:
OEM Media

Touch [ ] (Off) or [ ] (On) of "OEM Media".

Adjusting the OEM Media Volume

Setting item:
Volume Adjust
Setting level:
-14 to +14 (Initial setting: 0)

Touch [<] or [>] of "Volume Adjust" to set the factory media volume level.

Setting the Media

The Media setting can be changed for the connected iDataLink module.

Setting item:
Media Setup

- *This setting is only available when the iDataLink Maestro® module (sold separately) is connected.*
- *Depending on the iDataLink module, this setting item may not be displayed or the setting contents may differ.*

Setting the Maestro Module

The Maestro Module setting can be changed for the connected iDataLink module.

Setting item:
Maestro Setup

- *This setting is only available when the iDataLink Maestro® module (sold separately) is connected.*
- *Depending on the iDataLink module, this setting item may not be displayed or the setting contents may differ.*

Setting the Vehicle Information

The Vehicle Information setting can be changed for the connected iDataLink module.

Setting item:
Vehicle Information

- *This setting is only available when the iDataLink Maestro® module (sold separately) is connected.*
- *Depending on the iDataLink module, this setting item may not be displayed or the setting contents may differ.*

Setting the Gauges

The Gauges setting can be changed for the connected iDataLink module.

Setting item:
Gauges

- *This setting is only available when the iDataLink Maestro® module (sold separately) is connected.*
- *Depending on the iDataLink module, this setting item may not be displayed or the setting contents may differ.*

Setting the Parking Sensor

The Parking sensor setting can be changed for the connected iDataLink module.

Setting item:
Park Sensor

- *This setting is only available when the iDataLink Maestro® module (sold separately) is connected.*
- *Depending on the iDataLink module, this setting item may not be displayed or the setting contents may differ.*

Setting the Climate

The Climate setting can be changed for the connected iDataLink module.

Setting item:
Climate

- *This setting is only available when the iDataLink Maestro® module (sold separately) is connected.*
- *Depending on the iDataLink module, this setting item may not be displayed or the setting contents may differ.*

Dash Cam (Drive Recorder) Setup

[Dash Cam] is selected on the Function Setup Menu screen.

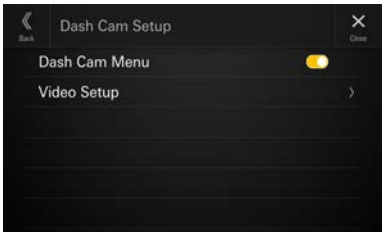

Display the Dash Cam Menu

Set to **[On]** when the optional driver recorder is connected.

Setting item:
Dash Cam Menu

Touch [ ] (Off) or [ ] (On) of "Dash Cam Menu".

Video Setup

Setting item:
Video Setup

Touch [<] or [>] of "Brightness, Color, Contrast" to set the picture quality.

- *Available only when "Dash Cam Menu" setting is [**On**] (page 28).*

Adjusting Brightness

Setting item:
Brightness
Setting contents:
-15 to +15 (Initial setting: 0)

Adjusting Color of Picture

Setting item:
Color
Setting contents:
0 to 2 (Initial setting: 0)

Adjusting Image Contrast

Setting item:
Contrast
Setting contents:
-15 to +15 (Initial setting: 0)

Camera Setup

[Camera] is selected on the Function Setup Menu screen.

Setting the Reverse Camera (Camera 1)

Set to **[On]** when the optional reverse camera is connected.

Setting item:
Reverse Camera (Camera 1)

Touch [ ] (Off) or [ ] (On) of "Reverse Camera (Camera 1)".

- *"Reverse Camera (Camera 1)" is not available when the Camera Setup screen is displayed using [**Setup**] of the Camera screen.*

Reverse Camera Format Setting

When "Reverse Camera (Camera 1)" setting is [**On**], the video input signal type can be chosen.

Setting item:
Reverse Camera Format
Setting contents:
NTSC (Initial setting) / PAL

Camera 2 Setup

Set how the second camera is used.

Setting item:
Camera 2 Setup
Setting contents:
Off (Initial setting) / Front / Side / Other

- *"Camera 2 Setup" is not available when the Camera Setup screen is displayed using [**Setup**] of the Camera screen.*

Camera 2 Format Setting

When "Camera 2 Setup" setting is not [**Off**], the video input signal type can be chosen.

Setting item:
Camera 2 Format
Setting contents:
NTSC (Initial setting) / PAL

Camera Guide Setup

You can adjust the camera guide position.

Setting item:
Camera Guide Setup

1 Touch [Camera Guide Setup] on the Camera Setup menu screen.

The camera guide adjustment screen is displayed.

2 Touch [Camera], and then touch a camera, [Rear], [Front] or [Side], to adjust.

- *The guide line of the Other Camera cannot be adjusted.*

■ Rear Camera screen example

■ Front Camera screen example

■ Side Camera screen example

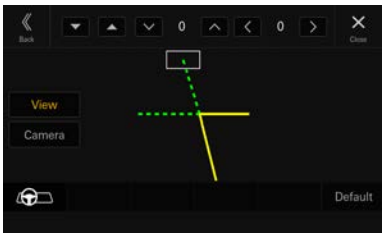

- *When adjusting the side camera, touch [**View**], and then [ ] (Left steering) or [ ] (Right steering) to make the guide line adjustment that matches the position of the steering wheel in your vehicle.*

3 **Select a guide to adjust by touching [▼][▲].**

4 **Touch [∨], [∧], [<] or [>] to adjust the position of the guide.**

5 **Touch [Back] or [Close] to complete the adjustment.**

- *The setting can be returned to the default setting by touching [**Default**].*

Hitch Guideline Adjustment

Adjustment can be made only by Rear Camera.

1 **Touch [View], and then touch [Hitch].**

The Hitch adjustment screen is displayed.

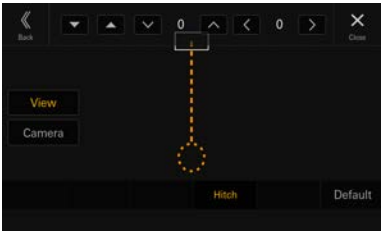

2 **touch [▼][▲]to select the guide to adjust.**

3 **Touch [∨], [∧], [<] or [>] to adjust the position of the guide.**

4 **Touch [Back] or [Close] to complete the adjustment.**

- *The setting can be returned to the default setting by touching [**Default**].*

Video Setup

Setting item:
Video Setup

Touch[<] or [>] of "Brightness, Color, Contrast" to set the picture quality

Adjusting Brightness

Setting item:
Brightness
Setting contents:
-15 to +15 (Initial setting: 0)

Adjusting Color of Picture

Setting item:
Color
Setting contents:
0 to 2 (Initial setting: 0)

Adjusting Image Contrast

Setting item:
Contrast
Setting contents:
-15 to +15 (Initial setting: 0)

Setting Audio Mute On/Off while Backing up

The audio volume can be muted when the shift gear lever is set to the reverse (R) position.

Setting item:
Mute While Backing Up

Touch [ ] (Off) or [ ] (On) of "Mute While Backing Up".

TIDAL Setup

[TIDAL] is selected on the Function Setup Menu screen.

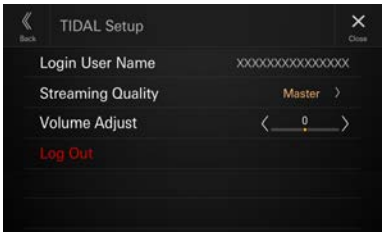

Confirm Login User Name

Setting item:
Login User Name

- *Login User Name is blank if you are not logged in to TIDAL.*

Setting the Streaming Quality

You can set the desired sound quality. Data traffic can be reduced by lowering the sound quality.

Setting item:
Streaming Quality
Setting contents:
Normal / High / HiFi / Master (Initial setting)

Normal:	This setting can reduce data usage and is an effective option when the communication speed is slow.
High:	This setting offers the best balance between data usage and sound quality.
HiFi:	This setting delivers sound quality equivalent to that of CDs.
Master:	This setting reproduces mastering studio sound and delivers it as the artist intended.

1 Touch to select [Streaming Quality].

The Streaming Quality screen is displayed.

2 Select the sound quality on the Streaming Quality screen, and touch [OK].

- *Streaming Quality is blank if you are not logged in to TIDAL.*

Adjusting the TIDAL Volume

Setting item:
Volume Adjust
Setting level:
-14 to +14 (Initial setting: 0)

Touch [<] or [>] of "Volume Adjust" to set the volume level for TIDAL playback.

Logging out of TIDAL

Setting item:
Log Out

1 Touch [Log Out].

The confirmation screen is displayed.

2 After the confirmation message appears, touch [OK].

- *After logging out, the TIDAL Setup menu screen reappears, the logout setting item is invalid and grayed out.*

System Setup

[System] is selected on the Settings menu screen.

■ System Setup Menu screen

Setting Items:
Key Sound Feedback (page 31)
Microphone EC/NR (page 31)
Language (Language) (page 32)
Clock Adjust (page 32)
Home Screen Type (page 32)
Screen/Lighting (page 32)
Screen Color (page 33)
Source Priority Setup (page 33)
Vehicle Types for Phone Link (page 33)
Installation Status (page 33)
About/Software Update (page 34)

Adjusting the Key Sound Volume

[Key Sound Feedback] is selected on the System Setup Menu screen
You can change the volume of the sound heard when a button is touched.

Setting item:
Key Sound Feedback
Setting contents:
0 to 7 (Initial setting: 4)

Setting the Microphone Effect

[Microphone EC/NR] is selected on the System Setup Menu screen.
Set this item when using a hands-free call or calling on Apple CarPlay/Android Auto.
You can adjust the level of the Microphone Effect according to the space inside the vehicle.

Setting item:
Microphone EC/NR
Setting contents:
1 / 2 (Initial setting) / 3

1:	Small space inside the vehicle
2:	Middle space inside the vehicle
3:	Large space inside the vehicle

- *This setting does not apply to Voice Recognition function.*

Language Setup

[Language (Language)] is selected on the System Setup Menu screen.
The Setup menu, feedback information, etc. for this unit can be changed to appear in the selected language.

Setting item:
Language*1 (Language*2)
Setting contents:
English (Initial setting) / Deutsch / Français / Español / Português / Italiano / Nederlands / Suomi / Norsk / Svenska / Dansk / русский язык / Slovenčina / Polski / Český / Magyar / Ελληνικά / ภาษาไทย / Türkçe / 中文 / العربية / 日本語 / עברית / Bahasa Indonesia

- *The currently selected language is displayed.*

*1 Display in the currently selected language.
*2 Always display in English.

Adjusting the Clock

[Clock Adjust] is selected on the System Setup Menu screen.

Setting item:
Clock Adjust

Setting the Time Format

The time format of the clock display can be set to the 12-hour or 24-hour display according to your preference.

Setting item:
Time Format
Setting contents:
12 Hour / 24 Hour (Initial setting)

Setting the Time Zone

The time zone can be set according to your region.

Setting item:
Time Zone
Initial setting:
UTC

Setting the Daylight Savings Time

To set the daylight saving time (Summer Time mode), set "Daylight Savings Time" to **[On]**.

Setting item:
Daylight Savings Time

Touch [ ] (Off) or [ ] (On) of "Daylight Savings Time".

Setting the Home Screen Type

[Home Screen Type] is selected on the System Setup Menu screen.
The Home screen can be changed to the Enhanced Text mode. For details, see "About the HOME Screen" (page 14).

Setting item:
Home Screen Type
Setting contents:
Normal (Initial setting) / Enhanced Text

Screen/Lighting Setup

[**Screen/Lighting**] is selected on the System Setup Menu screen.

Setting the Brightness of the Backlighting (Dimmer)

Backlighting is provided by LEDs light built into the liquid crystal panel. The illumination control adjusts the brightness of the backlighting based on the car ambient lighting for easier viewing.

Setting item:
Dimmer
Setting contents:
Auto (Initial setting) / On / Off

Auto:	Changes the brightness of the display and button lighting according to the brightness of the car interior.
On:	The brightness set with [Key Illumination Level] (page 32) and [Screen Dimmer Level] (page 33) is applied regardless of the brightness of the car interior.
Off:	Keeps the display and button lighting bright, regardless of the brightness of the car interior.

Adjusting the Dimmer of Button Lighting at Night

You can adjust the brightness of the button lighting at night with the dimmer.

Setting item:
Key Illumination Level
Setting level:
-2 to +2 (Initial setting: 0)

- *This setting is only available when "Dimmer" is set to [**On**] or [**Auto**].*

Adjusting the Minimum Level of Backlight

You can adjust the brightness of the backlight. This function could be used, for instance, to change the screen brightness while traveling at night.

Setting item:
Screen Dimmer Level
Setting contents:
-15 to +15 (Initial setting: 0)

- *This setting is only available when "Dimmer" is set to [**On**] or [**Auto**].*

Switching the Display Color

[Screen Color] is selected on the System Setup Menu screen.
You can choose from 8 different display Colors.

Setting item:
Screen Color
Setting contents:
Glass Blue (Initial setting) / Glass Green / Glass Light Blue / Glass Red / Glass White / Steel Blue Green / Steel Amber / Steel Red

Editing HOME screen

[Source Priority Setup] is selected on the System Setup Menu screen.
In the Widgets editing screen, you can change the audio source order.

Setting item:
Source Priority Setup

Touch [▼] [▲] of the source name to change the order.

Vehicle Type Setup

[Vehicle Types for Phone Link] is selected on the System Setup Menu screen.
Apple CarPlay and Android Auto require information about the vehicle to use all functions in the best possible way.

Setting item:
Vehicle Types for Phone Link

Steering wheel Setting

Set this item when Apple CarPlay is used or Android smartphone which installed Android Auto App is connected.
This setting influences Apple CarPlay/Android Auto mode.

Setting item:
Steering wheel
Setting contents:
Left (Initial setting) / Right

Fuel Type Setting

Set the Fuel type of your car.

Setting item:
Fuel Type
Setting contents:
Unknown / Unleaded gasoline (Initial setting) / Leaded gasoline / Diesel #1 / Diesel #2 / Biodiesel / 85% ethanol/gasoline blend / Liquified petroleum gas / Compressed natural gas / Liquified natural gas / Electric / Hydrogen fuel cell / Other

EV Connector Type Setting

When [Electric] is selected for "Fuel Type Setting" (page 33), set EV Connector Type.

Setting item:
EV Connector Type
Setting contents:
Unknown (Initial setting) / J1772 / Mennekes / Chademo / Combo_1 / Combo_2 / Tesla roadster / Tesla HPWC / Tesla Supercharger / GBT / Other

Installation Setup

[Installation Status] is selected on the System Setup Menu screen.
Vehicle Setup enables you to check the installation status of Camera 1, Camera 2, Maestro Module, SiriusXM Tuner, Dash Cam, GPS Antenna, GPS Information, Park, Vehicle Speed, Reverse, Battery Voltage.

Setting item:
Installation Status

The Installation check screen is displayed.

- *Depending on your vehicle, some installation status may not be checked via this function.*

About/Software Update iLX-507/ iLX-F509/iLX-F511/i509

[About/Software Update] is selected on the System Setup Menu screen.
By using **[About/Software Update]**, the Serial Number and Model name can be checked, the Software Version can be updated, and various settings can be initialized.

- *"Car by Car Update" is displayed in the setting item, but this feature is not available.*

Displaying the Product Information

You can view the version information of this product. Make note of this information and refer to it whenever you contact Alpine Tech Support or an Alpine-authorized dealer.

Setting item:
Serial No. / Model Name

Updating Software Version

Download the software from the Alpine website and update the product using the USB flash drive.

Setting item:
Software Version

1 Plug the USB flash drive with the update file stored into the USB 1 port of the unit.

2 Touch [Update] of "Software Version".

3 After the confirmation message appears, touch [OK].

Software Update screen is displayed, after finish checking the update file.

4 After Software Update screen is displayed, touch [Update].

System will restart automatically when the update is complete.

- *Do not turn on/off the power, change the ignition key position, until system restart is completed.*

Dedicated Tuning According to Your Car (Car by Car Update)

This setting is not used.

Displaying Software License

Setting contents:
Open-Source Software License

Initializing the Sound Settings

You can restore the EQ Setting*/X-OVER*/Time Correction*/ Media Xpander (MX)/bass engine/Subwoofer to factory settings.

Setting item:
Default Sound Settings

1 Touch [Set] of "Default Sound Settings".

2 After the confirmation message appears, touch [OK].

The system starts initialization.

∗ The setting values that are stored in Preset 1 to Preset 3 cannot be initialized.

Initializing the System

You can initialize all data, to restore the factory settings. Remove the USB flash drive, etc. from the system before operation.

Setting item:
Clear All Settings

1 Touch [Reset] of "Clear All Settings".

2 After the confirmation message appears, touch [OK].

The confirmation screen appears.

3 Touch [OK].

The system starts initialization.

- *Do not turn on/off the power, change the ignition key position, until system restart is completed.*

Sound Setup

You can set up items related to the sound quality.

Touch the upper central area [▼] of the Home screen.

The Sound Setup screen is displayed.

- *The Sound Setup screen can also be displayed by touching [⊞] (HOME) while displaying the Home screen.*

■ Sound Setup Menu screen

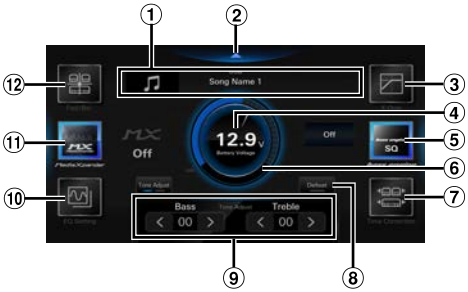

① Current source information display.
② Touch this to change to the Home screen.
③ X-OVER (page 38)
④ Battery Voltage display.
⑤ bass engine (page 38)
⑥ Volume level indicator
⑦ Time Correction (page 37)
⑧ Defeat (page 39)
⑨ Tone Adjust (Bass/Treble) (page 38), Sub Woofer Level (page 39)
⑩ EQ Setting (page 35)
⑪ Media Xpander (page 35)
⑫ Fader/Balance/Rear Speaker/Subwoofer (page 37)

Setting the Media Xpander (MX)

[**Media Xpander**] is selected on the Sound Setup Menu screen.
Media Xpander (MX) makes vocals or instruments sound distinct regardless of the music source. Music sources other than the radio (AM) will be able to reproduce the music clearer even in cars with a lot of road noise.

Setting item:
Media Xpander
Setting contents:
OFF (Initial setting) / MX 1 / MX 2/ MX 3

1 Touch [Media Xpander].

The Media Xpander setting screen is displayed.

2 Touch [Media Xpander] to switch the level.

OFF → MX 1 → MX 2 → MX 3 → OFF

- *The Media Xpander setting screen is returned to the Sound Setup Menu screen if no operation has been performed for more than 3 seconds.*
- *MP3/WMA/AAC/FLAC/WAV/APE can have its own MX setting.*
- *When the Defeat setting is [**On**], you cannot perform the set up.*
- *Not available when "bass engine" is set.*
- *The MX setting can be performed only when a source is currently selected.*

Equalizer Settings

[**EQ Setting**] is selected on the Sound Setup Menu screen.
EQ Setting has 3 modes, "Advanced EQ", "Basic EQ" and "Preset EQ".
- When the Defeat setting is **[On]**, you cannot perform the set up.
- Not available when "bass engine" is set.

Adjusting the Parametric Equalizer Curve (Advanced EQ/Basic EQ)

You can modify the Equalizer settings to create a response curve more appealing to your personal taste.
This unit has "Advanced EQ" which can set 4 types of speakers, and "Basic EQ" which can set 2 types of speakers.

■ Advanced EQ

■ **Basic EQ**

1 Touch [EQ Setting].

2 Touch [Advanced EQ] or [Basic EQ] to select Equalizer mode.

3 Select a speaker to adjust.

Advanced EQ:	Front Left / Front Right / Rear Left / Rear Right / Subw.
Basic EQ:	Front / Rear / Subw.

4 Touch [Band] to select the band to be adjusted.

Band1 → Band2 → ••• → Band12 → Band13 → Band1

- You can select a band directly by touching the screen.

5 Touch [<] or [>] of "Frequency" to adjust the frequency of the selected band.

Adjustable frequency bands:
20 Hz to 40 kHz (in 1/3 octave steps)

Band1:	20 Hz~100 Hz (63 Hz)
Band2:	63 Hz~315 Hz (125 Hz)
Band3:	100 Hz~500 Hz (200 Hz)
Band4:	160 Hz~800 Hz (315 Hz)
Band5:	250 Hz~1.25 kHz (500 Hz)
Band6:	315 Hz~1.6 kHz (630 Hz)
Band7:	500 Hz~2.5 kHz (1 kHz)
Band8:	1 kHz~5 kHz (2 kHz)
Band9:	1.6 kHz~8 kHz (3.15 kHz)
Band10:	2.5 kHz~12.5 kHz (5 kHz)
Band11:	4 kHz~20 kHz (8 kHz)
Band12:	6.3 kHz~31.5 kHz (12.5 kHz)
Band13:	10 kHz~40 kHz (20 kHz)

6 Touch [−] or [+] of "Level" to adjust the level of selected band.

Setting contents:
-9 to +9 (Initial setting: 0)

7 Touch [<] or [>] of "Q Factor" to select the bandwidth.

Setting contents:
Wide (Initial setting) / Medium / Narrow

8 Repeat steps 3 to 7, and adjust all speakers.

9 To store the adjusted setting value, touch and hold [Preset 1], [Preset 2], or [Preset 3] for at least 2 seconds.

- *Band2 and Band11 are the same as the Bass and Treble controls. For details on setting Bass and Treble, see "Adjusting Bass Level/Treble Level" (page 38).*
- *Settings exceeding the frequency of adjacent bands are not available.*
- *While adjusting the Parametric EQ, you should consider the frequency response of the connected speakers.*
- *When the Parametric EQ is adjusted, the Preset EQ is overridden.*
- *When Preset EQ is set, the linked Parametric EQ settings are also changed. We recommend storing Parametric EQ settings in a Preset in advance.*
- *Touch [**Flat**] to initialize all values.*

Calling the Parametric EQ adjusted value

Calling the pre-set Parametric EQ adjusted value.

Touch [Preset 1], [Preset 2], or [Preset 3] on the Parametric EQ screen.

The setting stored in the Preset will be recalled.

Equalizer Presets (Preset EQ)

10 typical equalizer settings are preset at the factory for a variety of musical source material.

Setting item:
Preset EQ
Setting contents:
FLAT / POP / ROCK / NEWS / JAZZ / ELECTRONIC / HIP HOP / EASY LISTENING / COUNTRY / CLASSICAL

- *EQ Presets has no initial setting, there is no typical equalizer will be selected in the initial status.*
- *Only one type can be set to On.*
- *When Preset EQ is set, the linked Parametric EQ settings are also changed. We recommend storing Parametric EQ settings in a Preset in advance.*

Fader/Balance/Rear Speaker/ Subwoofer Settings

[Fad./Bal.] is selected on the Sound Setup Menu screen.

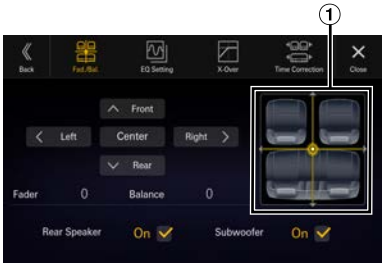

① Fader/Balance Image area

Setting the Fader/Balance

Touch the desired point within the image area, or touch [∧] (Front), [∨] (Rear), [<] (Left) or [>] (Right).

Fader:
F15 to R15
Balance:
L15 to R15

- *To reset to the initial setting (Balance: 0, Fader: 0), touch [Center].*

Rear Speaker Setting

You can set the rear speaker output to "Off."

Setting item:
Rear Speaker
Setting contents:
On (Initial setting) / Off

Turning Subwoofer ON/OFF

If an optional subwoofer is connected to the unit, make the following setting.

Setting item:
Subwoofer
Setting contents:
On / Off (Initial setting)

Time Correction Settings

[**Time Correction**] is selected on the Sound Setup Menu screen.
Before performing the following procedures, see "About Time Correction" (page 40).

Correction mode

Setting item:
Time Correction

1 Touch the Correction mode button, and then select [ms], [cm] or [inch].

2 Touch [—] or [+] for each speaker to adjust the time or distance.

0.00 msec to 20.00 msec (0.02 msec/step)
0.0 cm to 680.0 cm (0.68 cm/step)
0.0 inch to 268.0 inch (0.268 inch/step)

All speaker setting values are adjustable in the range of 20.0 ms, 680.0 cm or 268.0 inch.

3 To store the adjusted setting value, touch and hold [Preset 1], [Preset 2], or [Preset 3] for at least 2 seconds.

- *Touch [**Flat**] to set all values to 0.0.*
- *If the Rear Speaker setting is [**Off**], the Rear Speaker setting cannot be edited (page 37).*
- *If the Subwoofer setting is [**Off**], the Subwoofer setting cannot be edited (page 37).*

Calling the Time Correction Value

Calling the pre-set time correction value.

Touch [Preset 1], [Preset 2], or [Preset 3] on the time correction screen.
The setting stored in the Preset will be recalled.

Crossover Settings (X-OVER)

Before performing the following procedures, see "About the Crossover" (page 39).

Setting item:
X-OVER

1 Touch [X-OVER].

The X-OVER setting screen is displayed.

2 Touch [Front HPF], [Front LPF], [Rear HPF], [Rear LPF] or [Subw. LPF] to select a channel to adjust.

3 Touch [<] or [>] of "Frequency," and then select the cut-off frequency.

Setting contents:

Front HPF:	20 / 25 / 31.5 / 40 / 50 / 63 / 80 (Initial setting) / 100 / 125 / 160 / 200 / 250 Hz
Front LPF:	4k / 5k / 6.3k / 8k (Initial setting) / 10k / 12.5k / 16k / 20k Hz
Rear HPF:	20 / 25 / 31.5 / 40 / 50 / 63 / 80 (Initial setting) / 100 / 125 / 160 / 200 / 250 Hz
Rear LPF:	4k / 5k / 6.3k / 8k (Initial setting) / 10k / 12.5k / 16k / 20k Hz
Sub.w.LPF:	20 / 25 / 31.5 / 40 / 50 / 63 / 80 (Initial setting) / 100 / 125 / 160 / 200 / 250 Hz

4 Touch [<] or [>] of "Slope," and then adjust the HPF or LPF slope.

Setting contents:
0 (Initial setting) / 6 / 12 / 18 / 24 dB/oct.

5 Touch [−] or [+] of "Level," and then adjust the HPF or LPF level.

Setting contents:
-12 to 0 dB (Initial setting: 0)

6 Repeat steps 2 to 5 to make adjustment to the other channels.

7 To store the adjusted setting value, touch and hold [Preset 1], [Preset 2], or [Preset 3] for at least 2 seconds.

- *Touch [**Flat**] to initialize all values.*
- *If the Rear Speaker setting is [**Off**], the Rear Speaker setting cannot be edited (page 37).*
- *If the Subwoofer setting is [**Off**], the Subwoofer setting cannot be edited (page 37).*
- *While adjusting the X-OVER you should consider the frequency response of the connected speakers.*

Calling the X-OVER adjusted value

Calling the pre-set X-OVER adjusted value.

Touch [Preset 1], [Preset 2], or [Preset 3].

The setting stored in the Preset will be recalled.

Setting the "bass engine"

You can set your favorite "bass engine" Type.

Setting contents:

Type:	Off (Initial setting) / Standard / midbass / Rich / Lowbass / Punch
Level:	0 to 6

1 Touch [bass engine].

The "bass engine" setting screen is displayed.

2 Touch [bass engine] to switch the type.

Off → Standard → midbass → Rich → Lowbass → Punch → Off

3 Touch [−] or [+] of "BASS ENGINE Level," and then adjust the level.

- *When the Defeat setting is [**On**], you cannot perform the bass engine function.*
- *The "bass engine" setting screen is returned to the Sound Setup Menu screen if no operation has been performed for more than 3 seconds.*

Adjusting Bass Level/Treble Level

Setting item:
Bass, Treble

Setting contents:

Bass:	-18 to 18 (Initial setting: 00)
Treble:	-18 to 18 (Initial setting: 00)

Touch [<] or [>] of the "Bass" or "Treble," to adjust the level.

- *The Bass level and Treble level are reflected in the settings of Band2 and Band11 in EQ Setting. Depending on settings of Band2 and Band11 in EQ Setting, the adjustable Bass level and Treble level are changed.*

- *When "Bass" and "Treble" are not displayed, touch [**Subw.**] to switch to [**Tone Adjust**] mode.*
- *Not available when "bass engine" is set.*

Setting the Subwoofer

Touch [Tone Adjust].

The "Subwoofer Level" setting screen is displayed.

Adjusting the Subwoofer Level

You can set the Subwoofer level when a Subwoofer is connected.

Setting item:
Subwoofer Level
Setting contents:
0 to 15 (Initial setting: 0)

Slide the lever left or right to adjust the level.

- *This setting is only available when "Subwoofer" is set to [**On**] (page 37).*

Setting the Subwoofer Phase

The subwoofer output phase is toggled Subwoofer Normal (0°) or Subwoofer Reverse (180°).

Setting item:
Phase
Setting contents:
0° (Initial setting) / 180°

Touch [Phase] to switch the subwoofer output phase.

- *This setting is only available when "Subwoofer" is set to [**On**] (page 37).*

Defeat Setting

If Defeat is [**On**], Media Xpander, EQ Setting and "bass engine" functions are turned Off. This disables any settings made for these functions.

Setting item:
Defeat

Touch [Defeat].

The indicator lights up when Defeat is set to On.

About the Crossover

Crossover (X-Over):
This unit is equipped with an active crossover. The crossover limits the frequencies delivered to the outputs. Each channel is controlled independently. Thus, each speaker pair can be driven by the frequencies for which they have been optimally designed.
The crossover adjusts the HPF (high pass filter) or LPF (low pass filter) of each band, and also the slope (how fast the filter rolls off the highs or lows).
Adjustments should be made according to the reproduction characteristics of the speakers. Depending on the speakers, a passive network may not be necessary. If you are unsure about this point, please consult your authorized Alpine dealer.

	Cut-off frequency (1/3 octave steps)		Slope		Level
	HPF	LPF	HPF	LPF	
Subwoofer (LPF)	----	20 Hz - 250 Hz	----	0, 6, 12, 18, 24 dB/oct.	-12 to 0 dB
Rear speaker (HPF)	20 Hz - 250 Hz	----	0, 6, 12, 18, 24 dB/oct.	----	-12 to 0 dB
Front speaker (HPF)	20 Hz - 250 Hz	----	0, 6, 12, 18, 24 dB/oct.	----	-12 to 0 dB

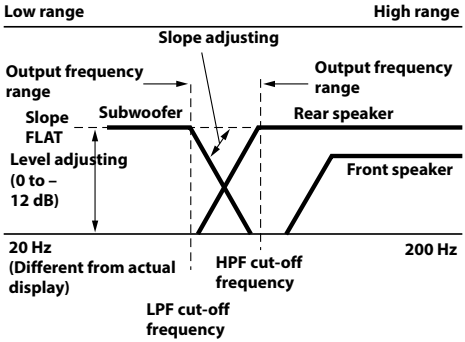

- *HPF (high pass filter): Cuts the lower frequencies and allows the higher frequencies to pass.*
- *LPF (low pass filter): Cuts the higher frequencies and allows the lower frequencies to pass.*
- *Slope: The level change (in dB) for a frequency change of one octave.*
- *The higher the slope value, the steeper the slope becomes.*
- *Adjust the slope to FLAT to bypass the HP or LP filters.*
- *Do not use a tweeter without the HPF on or set to a low frequency, as it may cause damage to the speaker due to the low frequency content.*
- *Adjustment should be made according to the recommended crossover frequency of the connected speakers. Determine the recommended crossover frequency of the speakers. Adjusting to a frequency range outside that recommended may cause damage to the speakers.*
  For the recommended crossover frequencies of Alpine speakers, refer to the respective Owner's Manual.
  We are not responsible for damage or malfunction of speakers caused by using the crossover outside the recommended value.

About Time Correction

The distance between the listener and the speakers in a car vary widely due to the complex speaker placement. This difference in the distances from the speakers to the listener creates a shift in the sounds image and frequency characteristics. This is caused by the time delay between the sound reaching the listener's right versus the left ear.
To correct this, this unit is able to delay the audio signal to the speakers closest to the listener. This effectively creates a perception of increased distance for those speakers. The listener can be placed at an equal distance between the left and right speakers for optimum staging.
The adjustment will be made for each speaker in 0.02 ms steps.

Example 1. Listening Position: Front Left Seat

Adjust the time correction level of the front left speaker to a high value and the rear right to zero or a low value.

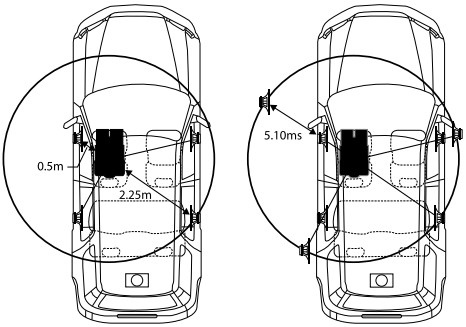

The sound is not balanced because the distance between the listening position and the various speakers is different. The difference in distance between the front left speaker and the rear right speaker is 1.75 m (68-7/8").

Here we calculate the time correction value for the front left speaker in the diagram on the above.

Conditions:
Farthest Speaker – listening position : 2.25 m (88-9/16")
Front left speaker – listening position : 0.5 m (19-11/16")
Calculation: L = 2.25 m – 0.5 m = 1.75 m (68-7/8")
Time correction = 1.75 ÷ 343* × 1,000 = 5.10 (ms)

∗ Speed of sound: 343 m/s (765 mph) at 20°C

In other words, giving the front left speaker a time correction value of 5.1 ms makes it seem as if its distance from the listener is the same as the distance to the farthest speaker.

Time correction eliminates the differences in the time required for the sound to reach the listening position.
The time of the front left speaker is corrected by 5.1 ms so that its sound reaches the listening position at the same time as the sound of other speakers.

Example 2. Listening Position: All Seats

Adjust the time correction level of each speaker to almost the same level.

1 Sit in the listening position (driver's seat, etc.) and measure the distance (in meters) between your head and the various speakers.

2 Calculate the difference between the distance correction value to the farthest speaker and the other speakers.

L = (distance to farthest speaker) – (distance to other speakers)

These values are the time correction values for the different speakers. Setting these values to make each sound reach the listening position at the same time as the sound of other speakers.

Apple CarPlay (Optional)

Apple CarPlay is a smarter, safer way to use your iPhone in the car. Apple CarPlay takes the things you want to do with your iPhone while driving and puts them right on the unit. You can get directions, make calls, send and receive messages, and listen to music, all in a way that allows you to stay focused on the road.

Access to Apple CarPlay

To use Apple Carplay, set the Siri setting of your iPhone to ON.
Before using this function, plug in your iPhone using a Lightning-USB cable (supplied with iPhone) to the unit, or make a wireless connection. For wireless connection, see "Pairing the Bluetooth® Device" (page 17) and "Setting the Wi-Fi Mode (page 18) .

- *When both Apple CarPlay and Android Auto device are connected, you cannot use Apple CarPlay and Android Auto at the same time.*

1 Press the ⊞ (HOME) button.

The HOME screen is displayed.

2 Touch [Apple CarPlay].

The Apple CarPlay screen is displayed.

[Apple CarPlay] button

- *When another iPhone is connected by USB while using CarPlay with the wireless connection, a message appears. Touch [**Yes**] to switch the iPhone.*
- *When the Android Auto compatible smartphone is connected by USB while in Apple CarPlay mode, a message appears. Only charging is available on the Android Auto compatible smartphone. When switching to Android Auto, switch from the Device List. See "Connecting the Device Registered in the Device List" (page 18).*
- *The App must be Apple CarPlay compatible in order to appear in the Apple CarPlay screen.*
- *Some functions may not be available while driving.*
- *The only iPhone models that can be used with this unit is iPhone 6s or later compatible with Apple CarPlay function.*

Using Voice Recognition function

You can use the Siri function of your iPhone. To use this function, set the Siri setting of your iPhone to ON.

- *When using Apple CarPlay, the operation screen may differ from the screen design in the Owner's Manual.*

1 Press the 🎙 button.

The Voice Recognition mode screen is displayed.

2 Speak into the microphone supplied with this unit.

3 To finish the Voice Control mode, press the 🎙 button.

- *Depending on the iPhone, the Siri function may finish automatically.*
- *For adjusting the volume, see "Adjusting the Voice Recognition Level" (page 22).*

Android Auto (Optional)

What is Android Auto

Android Auto brings your favorite smartphone apps into one place, making it easier for drivers to access their favorite navigation, media, and communication apps on the road while minimizing the distractions. Talk to Google on Android Auto™ and get things done with your voice so you can keep your eyes on the road and hands on the wheel. Easily send messages, get directions, control media and more. Just short-press or long-press the voice control button on your steering wheel.

Activate Android Auto

Download the Android Auto App from the Google Play store before continuing.
Before using this function, plug in your smartphone using a USB cable to the unit, or make a wireless connection. For wireless connection, see "Pairing the Bluetooth® Device" (page 17) and "Setting the Wi-Fi Mode" (page 18).

- *The connected smartphone with Android Auto will disconnect other phone's Bluetooth connection and pair to the unit.*
- *When both Apple CarPlay and Android Auto device are connected, you cannot use Apple CarPlay and Android Auto at the same time.*

1 Press the ⊞ (HOME) button.

The HOME screen is displayed.

2 Touch [Android Auto].

The Android Auto screen is displayed.

[Android Auto] button

- *When another smartphone is connected by USB while using Android Auto with the wireless connection, a message appears. Touch [**Yes**] to switch the smartphone.*
- *When the iPhone is connected by USB while in Android Auto mode, a message appears.*
  Only charging is available on the iPhone. When switching to Apple CarPlay, switch from the Device List. See "Connecting the Device Registered in the Device List" (page 18).
- *You can make a call, use voice recognition function and Android Auto's compatible navigation app, etc.*
- *Only Google approved apps with necessary driver-safety measures in place can be used.*

Using Voice Recognition function

You can use the Voice Recognition function of the Android Auto.

1 Press the 🎙 button.

The Voice Recognition mode screen is displayed.

2 Speak into the microphone supplied with this unit.

3 To finish the Voice Control mode, press the 🎙 button.

- *Depending on the smartphone, the Voice Recognition function may finish automatically.*
- *For adjusting the volume, see "Adjusting the Voice Recognition Level"(page 23).*

Radio/HD Radio™/RBDS

The unit can receive HD Radio broadcasting signals based on digital radio broadcast standards, in addition to analog radio broadcasts using RBDS.

HD Radio broadcasting signals are broadcast in the service areas of the current AM/ FM broadcasters where they provide digital audio distribution and data services. This unit receives the above digital broadcasts for your high-quality sound enjoyment.
Depending on the signal strength in TUNER mode, the unit will automatically switch between digital signals if they can be received, and analog radio using RBDS if digital signals cannot be received. For details, please see "Forced Analog Mode."

- *RBDS mode is only available during FM broadcast reception.*

This unit is able to receive signals based on the terrestrial digital radio broadcasting standard.
When current AM/FM broadcasters are transmitting digital audio and data services, HD Radio broadcasting signals are on-the-air in their service area. You can receive their digital broadcast and enjoy high quality sound.
If there is no HD Radio broadcasting signal in the current area, after 15 seconds, this unit will switch to receive the RBDS Radio signal automatically. However, the display is still HD Radio Technology mode screen.

■ HD Radio main screen example

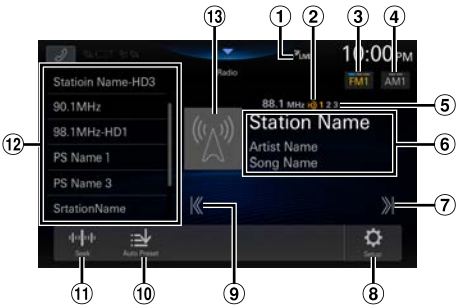

① LIVE indicator

② HD Radio indicator (HD Radio™ mode only)

③ Switch the FM band.

④ Switch the AM band.

⑤ Multicast station channels indicator
1: MPS (Main Program Service)
2 -8: SPS (Supplemental Program Service)

⑥ Information display
RBDS
Station Info. mode:
Frequency/PS Name/Artist Name/Song Name
Radio Text mode:
Frequency/Radio Text
- For details on switching the display of the Radio text, see "Displaying Radio Text (HD Radio™/RBDS FM Radio mode only)" (page 45).

HD Radio Technology
Station Info. mode:
Frequency/Station Name/Artist Name/Song Name

⑦ Increases frequency
Touch and hold to change the frequency continuously.

⑧ Displays the Radio Setup Menu screen (page 23).

⑨ Decreases frequency
Touch and hold to change the frequency continuously.

⑩ Memorizes stations automatically.

⑪ Switches a Seek mode.

⑫ Preset List
Displays the preset stations with a short touch.
Touch for at least 2 seconds to memorize the current station as a preset station.
- The multicast station channel number is displayed during multicast reception.

⑬ Artwork etc./Station Logo display (HD Radio™ mode only)

Radio Basic Operation

Listening to the Radio

1 Press the ⊞ (HOME) button and select radio mode.

The display shows the radio mode screen.

2 Touch [FM○] or [AM○] to select a band.

Each touch changes the bands as follows:
FM1 → FM2 → FM3 → FM1
AM1 → AM2 → AM1

3 Touch [ ] repeatedly to select the tuning mode.

The radio frequency up or down button changes depending on the tuning mode.

Seek mode*:	Stations with certain strength or higher are tuned.
Digital Seek mode:	Automatically receives a receivable digital broadcast.
Manual mode:	The frequency is manually tuned in steps.
Program Type mode: (RBDS FM Radio Mode only)	A station of the same program type selected for the PTY Seek Item setting is tuned in.
Preset mode:	You can directly switch preset stations.

* Depending on the signal, a digital or analog broadcast is received.

4 Touch [ ], [ ] to change the radio frequency up or down respectively.

In Manual mode, touch and hold to change the frequency continuously.

- *The ⏮, ⏭ buttons provide the same functions above.*

Presetting Stations Manually

1 Tune in a desired radio station you wish to store in the preset memory by manual or automatic seek tuning.

2 Touch and hold the preset button you want to store for at least 2 seconds.

The selected station is stored.

3 Repeat the procedure to store up to 11 other stations onto the same band.

To use this procedure for other bands, simply select the desired band and repeat the procedure.

A total of 60 stations can be stored in the preset memory
(12 stations for each band; FM1, FM2, FM3, AM1 or AM2).

Presetting Stations Automatically

The tuner can automatically seek and store 12 strong stations in the selected band in ascending order of frequency.

Select the desired band then touch and hold [Auto Preset].

The tuner automatically seeks and stores 12 strong stations into the preset list in ascending order of frequency.
When automatic storing has completed, the station stored in the preset 1 is selected.

- *If no stations are stored, the tuner will return to the original station you were listening to before the automatic storing procedure began.*
- *You can cancel this process by touching [**Auto Preset**] while the tuner is automatically seeking stations. Canceling will return the tuner preset to the previous setting.*

Tuning to Preset Station

After selecting the desired band, touch the desired preset button.

The preset station is received.

Receiving a Multicast (HD Radio™ Mode only)

Multicasting is the ability to broadcast multiple program streams over a single FM frequency. This increases the amount and diversity of content choices. A maximum of 8 multicast station channels can be selected on this unit.

- *Multicast station channels indicator appears when signal reception is possible.*

Touch [ ], [ ].

The sub channel of the received radio station is changed.

- *The ⏮, ⏭ buttons provide the same functions above.*
- *If reception is lost during SPS broadcasting due to weak or no signal, the screen will display "HDx Signal loss."*

Forced Analog Mode

Set the Receiving mode to **[Forced Analog]** to receive only analog radio signals. For details, see "Setting the Receiving mode" (page 23).

- *During Forced Analog mode, only analog broadcasts will be received even when digital broadcasts become available.*

About Ballgame Mode (HD Radio™ Mode only)

The LIVE indicator will lights up when receiving live broadcast such as sportscast.

■ Ballgame mode screen example

- *In live broadcast, such as sportscasts, etc., a time lag occurs between digital sound and analog sound. Therefore, when live broadcasts are received, a time lag between the real broadcast may occur and the unit can change to analog broadcasting automatically.*

Displaying Radio Text (HD Radio™/ RBDS FM Radio mode only)

Text messages from a radio station can be displayed.

1 Tune in a radio station that transmits text messages.

2 Touch the information display in the FM radio mode repeatedly to switch to the desired display.

Station Info. mode → Radio Text → Station Info. mode

Station Info. Mode:
Frequency/PS Name/Artist Name/Song Name

Radio Text Mode:
Frequency/Radio Text

About the Feature Logos

Digital Sound

- *Digital, CD-quality sound. HD Radio Technology enables local radio stations to broadcast a clean digital signal. AM sounds like today's FM and FM sounds like a CD.*

PSD

- *Program Service Data: Contributes to the superior user experience of HD Radio Technology. Presents song name, artist, station IDs, HD2/HD3 Channel Guide, and other relevant data streams.*

HD2/HD3

- *Adjacent to traditional main stations are extra local FM channels.*
  These HD2/HD3 Channels provide new, original music as well as deep cuts into traditional genre.

Artist Experience

- *Visual information related to content being played on your HD Radio receiver, such as Album Art, historical photographs, still art from live broadcasts, among other related content.*

USB Flash drive (Optional)

You can play back music files (MP3/WMA/AAC/FLAC/WAV/APE), video files (MP4/MOV/FLV/MKV) stored in a USB flash drive on the internal player of this system.

⚠ WARNING

It is dangerous for the driver to watch video while driving the vehicle. The driver may be distracted from looking ahead and an accident could occur.

Install the unit correctly so that the driver cannot watch a video unless the car is stopped and the parking brake is applied.

If the unit is not installed correctly, the driver will be able to watch a video while driving and may be distracted from looking ahead and cause an accident. The driver or other people could be severely injured.

USB Audio

■ USB Audio mode screen

① Information display

② Switches to USB Video mode

③ Finds the beginning of next chapter/Fast-forwards when touched for at least 1 second

④ Current track number/Total track number

⑤ Next song information display

⑥ Hi-Res icon display
- Not displayed if the following conditions are not satisfied.
  - Extension: .flac/.wav
  - Sampling frequency: 96 kHz or more
  - Quantization bit rate: 24 bit or more

⑦ Displays the USB Setup Menu screen (page 24)
⑧ Time Bar (Elapsed time/Total time for playing)
⑨ Displays the search screen
⑩ Shuffle mode
⑪ Repeat mode
⑫ Pause and Play
⑬ Artwork display
⑭ Finds the beginning of the current file/Finds a previous file within 3 seconds after playback starts/Fast-reverses when touched for at least 1 second

Playback

1 Press the (HOME) button and select USB mode.

The display shows the USB mode screen.

- When in USB Video mode, touch [**Video**] to switch to USB Audio mode.

2 Touch [ ] or [ ] to select the desired track (file).

Returning to the beginning of the current (or previous) track (file):
Touch [ ].

Fast reverse :
Touch and hold [ ].

Advancing to the beginning of the next track (file) :
Touch [ ].

Fast forward :
Touch and hold [ ].

- *The , buttons provide the same functions above.*
- *Touch or slide the Time Bar to fast-forward or fast-reverse.*

3 To pause playback, touch [ ].

Touching [ ] again will resume playback.

- *If there is tag information, artist name/album name/track name is displayed.*
- *ID3 tag/WMA tag*
  If an MP3/WMA/AAC/FLAC/WAV/APE file contains ID3 tag/WMA tag information, the ID3 tag/WMA tag information is displayed. (e.g., song name, artist name, and album name)

Repeat Play

Touch [ ], [ ] or [ ] to select Repeat Play mode.

All :	All files are repeatedly played back.
File :	Only the file currently playing is repeatedly played back.
Folder :	Only files in a folder are repeatedly played back. Only available when a file is played back by searching a Folder.

Shuffle Play

Touch [ ] to select Shuffle Play mode.

On :	Songs in the selected category (artist, album, etc.) are played back in random order. Songs in the category are played back only once until all songs are played back.
Off :	Shuffle mode is Off.

Searching for a Desired Song

This unit can make various searches using the search function as shown below.
Using the Song/Artist/Album/Genre/Folder search mode's individual hierarchy, you can narrow down your search as shown in the table below.

<Music Search Menu>

Hierarchy 1	Hierarchy 2	Hierarchy 3	Hierarchy 4
Songs	—	—	—
Artists	Albums	Songs	—
Albums	Songs	—	—
Genres	Artists	Albums	Songs
Folder	File	—	—

For example: Searching by Artist name
The following example explains how an Artists search is performed.

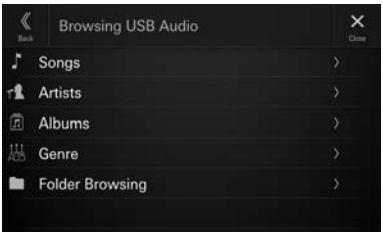

1 Touch [🔍] (Search) during playback.

2 Touch [Artists].

The Artists search screen is displayed.

3 Touch the desired artist's name.

4 Touch the desired album's name.

All songs of the selected album are displayed.

5 Touch the desired song's name.

The selected song is played back.

USB Video

The video formats (USB Flash drive) supported by the unit are as follows.

- Supported Container: MP4/MOV/FLV/MKV
- Supported Video Coding: MPEG-4/H.263/H.264 (MPEG-4 /AVC)/MPEG-1/MPEG-2
- Supported Audio Coding: MP3/WMA/AAC/WAV/FLAC/ APE

■ USB Video mode screen

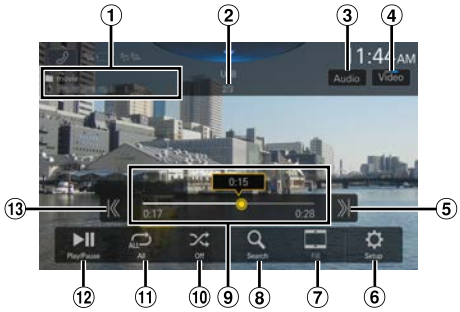

① Folder Name/File Name

② Current file number/Total file number

③ Changes the Audio Tracks (Only during MKV file playback)

④ Switches to USB Audio mode

⑤ Finds the beginning of next file/Fast-forwards when touched for at least 1 second

⑥ Displays the USB Setup Menu screen (page 24)

⑦ Switching Display Modes

⑧ Displays the search screen

⑨ Time Bar (Elapsed time/Total time for playing)

⑩ Shuffle mode

⑪ Repeat mode

⑫ Pause and Play

⑬ Finds the beginning of the current file/Finds a previous file within one second after playback starts/Fast-reverses when touched for at least 1 second

Playback

1 Press the (HOME) button and select USB mode.

The display shows the USB mode screen.

- When in USB Audio mode, touch [**Music**] to switch to USB Video mode.

2 During the USB Video playback, touch the screen to display the operation screen.

The USB Video operation screen is displayed for about 5 seconds.

3 Touch [ ] or [ ] to select the desired track (file).

Returning to the beginning of the current (or previous) track (file):
Touch [ ].

Advancing to the beginning of the next track (file) :
Touch [ ].

- *The , buttons provide the same functions above.*

4 To pause playback, touch [ ].

Touching [ ] again will resume playback.

- *For your safety, video is not displayed and only audio can be heard while driving.*

Fast-forwarding/Fast-reversing

1 During playback, touch and hold [ ] (Fast-reverse) or touch and hold [ ] (Fast-forward).

- Touch and hold for more than 1 second to forward/reverse at 2x speed. Keep touching to switch the speed to 3x, 8x,16x and 32x.

2 Release [ ] or [ ] to return to normal playback.

- *The , buttons provide the same functions above.*
- *Touch or slide the Time Bar to fast-forward or fast-reverse.*

Repeat Play

Touch [ ], [ ] or [ ] to select Repeat Play mode.

All :	All files are repeatedly played back.
File :	Only the file currently playing is repeatedly played back.
Folder :	Only files in a folder are repeatedly played back.

Shuffle Play

Touch [ ] to select Shuffle Play mode.

On :	Files in the selected folder are played back in random order. Files in the category are played back only once until all files are played back.
Off :	Shuffle mode is Off.

Searching for a Desired file

1 Touch [ ] (Search).

2 Touch your desired Folder name or File name.

- *When you select a Folder name, repeat the same procedure to select another Folder name or File name.*

Switching Display Modes

You can switch the Display Mode while playing a Video File.

Touch the Display Mode button.

Each time you touch, the Display Mode is switched.
Fit → Fill → Fit

Display Mode button

- *The Display Mode button displays the currently selected mode.*
- *You cannot operate them while driving.*

Fit:	The mode displays a picture to fit its size vertically and horizontally with the monitor size.
Fill:	Cut the top and bottom of the image and stretch it over the entire screen.

Switching the Audio Tracks

When the image has multiple sound tracks, the sound track can be switched during playback or pausing.

Touch [Audio].

The sound switches in order each time it is touched. The format of the sound is displayed on the screen.

- *If more than one audio is not recorded in the video, the [**Audio**] button will not be displayed.*

iPod mode on iPhone (Optional)

A separately sold Lightning to USB cable, etc., is required.

- *This unit does not support video playback from an iPhone which connected to this unit via the USB Connector.*
- *Internet or telephone function, etc., of the iPhone is not controllable from the unit, but these functions can be controlled using the iPhone itself.*
- *When an iPhone is connected, Apple CarPlay mode is turned on. To use you iPhone with iPod mode, turn "On" the CarPlay setting on the iPhone.*

■ iPod main screen example

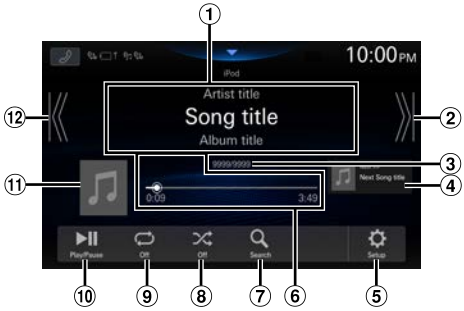

① Information display*
② Finds the beginning of next chapter/Fast-forwards when touched for at least 1 second
③ Current song no./Total song no.
④ Next song information display
⑤ Displays the iPod Setup Menu screen (page 24)
⑥ Time Bar (Elapsed time/Total time for playing)
⑦ Displays the search screen
⑧ Shuffle mode
⑨ Repeat mode
⑩ Pause and Play
⑪ Artwork display
⑫ Finds the beginning of the current file/Finds a previous file within 3 seconds after playback starts/Fast-reverses when touched for at least 1 second

* Podcast mode.

Playback

1 Press the ⊞ (HOME) button and select iPod mode.

The display shows the iPod mode screen.

2 Touch [⏮] or [⏭] or to select the desired track (file).

Returning to the beginning of the current (or previous) track (file):
Touch [⏮].

Fast reverse the current track :
Touch and hold [⏮].

Advancing to the beginning of the next track (file) :
Touch [⏭].

Fast forward the current track :
Touch and hold [⏭].

- *The ⏮, ⏭ buttons provide the same functions above.*
- *Touch or slide the Time Bar to fast-forward or fast-reverse.*

3 To pause playback, touch [▶II].

- *If a song is playing on the iPhone before it is connected to the unit, it will continue playing when it is connected.*
- *Audiobooks may have several chapters. The chapter can be changed by touching [⏮] or [⏭].*
- *If the artist, album or song name, created in iTunes, has too many characters, songs may not be played back when connected to the unit. Therefore, a maximum of 64 characters is recommended. The maximum number of characters for the unit is 64.*
- *Some characters may not be correctly displayed.*

Searching for a Music File

An iPhone can contain thousands of songs. For this reason, this unit can make various searches using the search function as shown below.
Using the Playlists/Artists/Albums/Podcasts/Audiobooks/Genres/Composers/Songs/Radio search mode's individual hierarchy, you can narrow down your search as shown in the table below.

<Music Search Menu>

Hierarchy 1	Hierarchy 2	Hierarchy 3	Hierarchy 4
Playlists	Songs	—	—
Artists	Albums	Songs	—
Albums	Songs	—	—
Songs	—	—	—
Genres	Artists	Albums	Songs
Composers	Albums	Songs	—
Podcasts	Episodes	—	—
Audiobooks	—	—	—
Radio	—	—	—

For example: Searching by Artist name
The following example explains how an Artists search is performed.

1 Touch [🔍] (Search) during playback.

2 Touch [Artists].

The Artists search screen is displayed.

3 Touch the desired artist's name.

4 Touch the desired album's name.

All songs of the selected album are displayed.

5 Touch the desired song's name.

The selected song is played back.

Repeat Play

Touch [ ] to select Repeat Play mode.

All Tracks ALL:	All songs are repeatedly played back.
Single Track 1:	Only the song currently playing is repeatedly played back.
Off:	Repeat mode is Off.

Shuffle Play

Touch [ ] to select Shuffle Play mode.

Album:	The songs on each album are played back in proper order. Upon completing of all the songs on the album, the next album is selected randomly. This continues until all albums have been played.
Songs:	Randomly plays back songs within a selected category (playlist, album, etc.). The songs within the category are played just once until all songs have been played.
Off:	Shuffle mode is Off.

SiriusXM Satellite Radio Operation (Optional)

SiriusXM Tuner operation:

When an optional SiriusXM SXV300 Connected Vehicle Tuner (2018-UP) is connected to this unit, the following operations may be performed.
How to identify compatible SXM tuners. On the back of SXM tuner (G2) will be near to Radio ID

■ SiriusXM main screen example (Song Info. Mode)

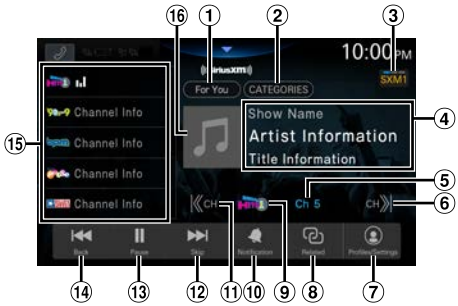

① Displays the "For You" screen (page 54)

② Changes to category browsing mode (page 53)

③ Switch the SiriusXM band.

④ Information display
Show Name/Artist Name/Track Name

⑤ Channel Number display
Touch to displays the Direct Tune screen (page 52).

⑥ Changes to the next channel, and displays the Linear Tuner screen (page 52)

⑦ Displays the profiles/setting screen (page 55)

⑧ Displays the related content screen (page 54)

⑨ Channel logo display

⑩ Displays the artist/song/sports team notification setting screen (page 54)

⑪ Changes to previous channel, and displays the Linear Tuner screen (page 52)

⑫ Skip Forward (by segment/track)
Touch and hold to change to the program currently being broadcast.

⑬ Pause and Play

⑭ Skip Backward (by segment/track)

⑮ Preset list
Displays the preset stations with a short touch.
Touch for at least 2 seconds to memorize the current station as a preset station.

⑯ Album art display

Receiving Channels with the SiriusXM Tuner

About SiriusXM® Radio
SiriusXM is where moments happen. The widest, deepest variety of music, ad-free. More games, more sports, more coverage than anywhere. The most extensive entertainment, complete news coverage and every kind of comedy. Listen in your car, on your phone, online and at home. A SiriusXM Vehicle Tuner and subscription are required. For more information, visit www.siriusxm.com.

- *The SiriusXM Satellite Radio controls on this unit are available only when a SiriusXM Tuner is connected.*

After you have found the SiriusXM Radio ID, you can activate your radio. See "Checking the SiriusXM Radio ID Number" (page 53).

In the USA, you can activate online or by calling SiriusXM Listener care:
- *Visit www.siriusxm.com/activatenow*
- *Call SiriusXM Listener Care at 1-866-635-2349*

For Canadian Subscriptions, please contact:
- *Visit www.siriusxm.ca/activate*
- *Call SiriusXM Customer Care at 1-888-539-7474*

1 Touch the ⊞ (HOME) button and select SiriusXM mode.

The display shows the SiriusXM mode screen.

2 Touch [SXM○] to select a band.

Each touch changes the bands as follows:
SXM1 → SXM2 → SXM3 → SXM1

3 Touch [⏮ CH] or [CH ⏭] to select the desired channel. Touching and holding either button will rapidly browse through the channels.

- *Refer to the SiriusXM Tuner User Guide for details on how to install the SiriusXM Tuner.*
- *The ⏮, ⏭ buttons provide the same functions above.*

Selecting the Channel (Linear Tune)

1 Touch [⏮ CH] or [CH ⏭].

The Linear Tune screen is displayed.
Channel is switched to the previous or next channel, and the channel selection screen is displayed, then the selected channel is displayed in the focus position.

① Focus position
② Displays the Direct Tune screen (page 53).

2 Touch [⏮ CH] or [CH ⏭] or swipe left or right while the channel selection screen is displayed to move the target channel to the focus position.

When the received channel is in the focus position, the playback screen for the received channel is displayed if you touch the channel in the focus position or if nothing is operated for about 10 seconds.

- *When the channel cannot be received, the screen cannot be displayed.*
- *If you touch a channel other than the one in the focus position and it can be received, you can switch the channel. If the channel cannot be received, only the screen changes.*

Selecting the Channel Directly (Direct Tune)

You can directly select the channel number by using the numeric keypad.

1 Touch [DIRECT TUNE] on the channel selection screen.

The Direct Tune screen is displayed.

2 Touch to input the channel number.

3 Touch [GO].

The selected channel is received.

Tuning Channels by Category

Channels are grouped into categories based on the type of content heard on the channels.

1 Touch [CATEGORIES] on the SiriusXM main screen to activate the category browsing mode.

The Categories screen appears.

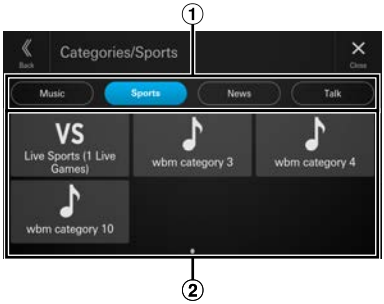

① Super Categories
Up to 16 types of super categories can be displayed. To switch the super category, swipe the super categories section left or right.

② Categories
Up to 48 categories can be displayed in one super category. To switch the category, swipe the categories section left or right.

2 Touch the target super category, then the target category.

The Categories Channel List screen appears.

- To switch the channel, swipe the screen left or right.

3 Select the desired channel.

Checking the SiriusXM Radio ID Number

To subscribe to the SiriusXM Satellite Radio service, it is necessary to locate and identify the Radio ID of your SiriusXM Tuner. You can check the Radio ID on the bottom surface of the SiriusXM Tuner box. You can also check it from this unit by performing the following procedure.

1 While receiving SiriusXM Radio, touch [⏮ CH] or [CH ⏭] to select channel "0".

The unit displays the Radio ID number.

2 To cancel the Radio ID number display, change the channel to a channel other than "0".

- *The SiriusXM Radio ID does not contain the letters I, O, S, or F.*
- *System Information on the Profiles/Setting screen can also be used to view the Radio ID number. See "Displaying the System Information" (page 56).*

Storing Channel Presets

You can store 36 of your favorite SiriusXM channels for easy recall with Preset lists.

1 Touch and hold the preset lists you want to store for at least 2 seconds to store the channel.

2 Repeat the procedure to store up to 11 other channels.

12 presets can be stored in each of the 3 SXM bands for a total of 36 presets.

- *If you store a new channel into a preset which already has a channel assigned, the current channel will be cleared and replaced with the new one.*

Tuning Channels using Presets

Touch any one of the preset lists you have already stored in the Preset mode screen.

The preset channel is received.

Replay Function

In SiriusXM mode, you can pause, skip track and replay live Satellite Radio.

① Each tap of the Back button will skip to the beginning of the prior song/talk segment. Press and hold to rewind through the content.

② Pause and Play

③ Each tap of the Skip button will skip to the beginning of the next song/talk segment until you reach live broadcast.

Listening to the Recommended Channels "For You"

The "For You" list will display up to 8 channels that are recommended by SiriusXM based on your listening history. The more you listen, the better the recommendations.

1 Touch [For You].

The "For You" screen appears.

- A message will appear if the "For You" channel list is not ready. You may need to wait a few minutes and try again.

2 Touch the desired channel.

The channel you selected is received.

- *Swipe left or right to scroll through the screen.*
- *The channel currently being listened to is not included in the "For You" channel list.*
- *When a Contextual Banner appears, touch the title to operate according to the banner.*

Listening to Related Channels

You can quickly discover other channels that are related to the channel you are listening to.

1 Touch [Related].

The Related Content screen appears.

- A message will appear if the related channel list is not ready. You may need to wait a few minutes and try again.

2 Touch the desired channel.

The channel you selected is received.

- *Swipe left or right to scroll through the screen.*
- *A message will be displayed when there is no related content.*

Setting Notifications

You can easily set alert notifications for your favorite songs, artists, or sports teams while listening to them live. Once stored, you will be notified whenever that song, artist or sports team is playing on other channels.

1 Touch [Notification].

The Notification screen appears.

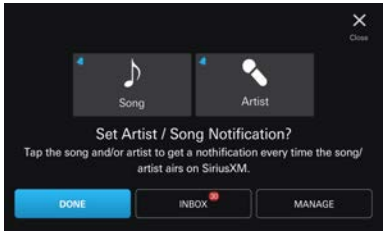

2 Touch the artist name, song name, or team name.

3 Touch [DONE].

Selected item is added to the notifications.

- *When you touch [**INBOX**], the notifications list screen is displayed.*
- *When you touch [**MANAGE**], the Manage Notifications screen is displayed. For details, see "Managing Notifications" (page 55).*

Viewing Listening History

A list of up to the last 18 channels can be accessed easily.

1 Touch [Profiles/Settings].

The Profiles screen appears.

2 Touch [HISTORY] of "Listener Items".

The Listening History screen appears and a history of up to 18 channels is displayed.

- Swipe left or right to scroll through the screen.

3 Touch the desired channel.

The channel you selected is received.

- *The channel currently being listened to is not included in the history list.*

Listener Settings

1 Touch [Profiles/Settings].

The Profiles screen appears.

2 Touch [LISTENER SETTINGS] of "Listener Items".

The Listener Settings screen appears.

Setting Notifications from SiriusXM

Set to **[OFF]** to not allow the SiriusXM notifications.

Setting item:
Notifications

Touch [OFF] or [ON] of "Notifications".

Managing Notifications

You can receive notifications from the channels playing your favorite artists or songs, or notifications on the start of games.

Touch [MANAGE] of "Notifications".

The Manage Notifications screen appears.

Setting the Artist & Songs

Setting item:
Artists & Songs

Touch [OFF] or [ON] of "Artists & Songs".

- *The list of artists and songs added to the notifications is displayed when you touch* [**ARTISTS & SONGS**]. *Touch the tile to turn the notification to on/off. Continue touching to delete.*

Setting the Sports

Setting item:
Sports

Touch [OFF] or [ON] of "Sports".

- *The Team Notifications screen is displayed when you touch* [**TEAMS**]. *Touch the team name to turn notifications ON/OFF. Continue touching to delete.*
- *Touch* [**Add Team**] *to add a new team.*

Setting Block Explicit

Set to **[ON]** to block channels with explicit content.

Setting item:
Block Explicit

Touch [OFF] or [ON] of "Block Explicit".

Setting Tune Start

Tune to a Preset that is a music channel and automatically start a song from the beginning with TuneStart™.

Setting item:
Tune Start

Touch [OFF] or [ON] of "Tune Start".

Resetting History

Reset Listening History and Recommendations.

1 Touch [RESET HISTORY] of "Reset History".

2 Touch [RESET].

History is reset.

Subscribing to SiriusXM by Phone

You can see your subscription account information. If "No Subscription" is displayed, you can make a call to SiriusXM using the hands-free phone to subscribe.

1 Touch [Profiles/Settings].

The Profiles screen appears.

2 Touch [Subscribe] of "Subscription".

3 Touch [CALL].

- *If you have already subscribed, the [**Subscribe**] button will not be displayed.*

Displaying the System Information

Radio ID and SiriusXM software version information can be displayed.

Touch [Profiles/Settings].

The Profiles screen appears.
See the system information items.

Receiving Support by Phone

You can make a call to SiriusXM to receive support if a hands-free phone is connected to the unit.

1 Touch [Profiles/Settings].

The Profiles screen appears.

2 Touch [CONTACT SIRIUSXM] of "Help & Support".

3 Touch [CALL SIRIUSXM].

Setting Your Location

Set the location (US or Canada) for where you will be subscribing to SiriusXM.

1 Touch [Profiles/Settings].

The Profiles screen appears.

2 Select [I live in the US] or [I live in Canada] of "Location", then touch [OK] .

Banner advisory messages

If the banner below appears on the channel tile, follow the instructions.

Unavailable:
The channel that you have requested is not a valid SiriusXM channel or the channel that you were listening to is no longer available.

Upgrade to Listen:
The current subscription plan does not include these channels. Upgrade your subscription plan to enjoy all the SiriusXM content. In the US go to siriusxm/activatenow or call SiriusXM at 1-866-587-4225 to subscribe, or in Canada go to siriusxm.ca/activate or call SiriusXM at 1-888-539-7474 to subscribe.

Subscribe to Listen:
Your SXM tuner is currently unsubscribed. In the US go to siriusxm/activatenow or call SiriusXM at 1-866-587-4225 to subscribe, or in Canada go to siriusxm.ca/activate or call SiriusXM at 1-888-539-7474 to subscribe.

Try Me:
SiriusXM is having a free listening promotion of this channel and others which are not included in your subscription plan for you to try. Upgrade your subscription to continue listening to these channels after the promotion is over.

HDMI Device (Optional)

Devices supporting HDMI can connect and play back through this unit (for example, iPhone or other Smartphones).

- *HDMI pass-though supports the following.*
  – USB Video: MP4/MOV/FLV/MKV
- *HDMI will also output HDMI input source.*
- *The HDMI/MHL connecting cable differs depending on the connected device corresponding to HDMI. Prepare optional HDMI/MHL connecting cable sets suitable for your device.*

> ⚠ **WARNING**
>
> **It is dangerous for the driver to watch video while driving the vehicle. The driver may be distracted from looking ahead and an accident could occur.**
>
> **Install the unit correctly so that the driver cannot watch video unless the car is stopped and the parking brake is applied.**
>
> **If the unit is not installed correctly, the driver will be able to watch video while driving and may be distracted from looking ahead and cause an accident. The driver or other people could be severely injured.**

HDMI Operation

■ iPhone, Smartphone, etc.

The output of your electronic device will be mirrored on this unit through the HDMI connector. Control from this unit is not possible.

- *In HDMI player mode, the screen of the device displays the content of electronic equipment by mirror image.*
- *The electronic device must possess an HDMI output interface.*
- *Not all devices with an HDMI output interface can be recognized by this unit.*
- *Use only the Alpine Special HDMI connection cable.*

1 Press the ⊞ (HOME) button to select HDMI.

The display shows the HDMI mode screen.

2 During the HDMI playback, touch and hold the screen to display the operation screen.

The HDMI operation screen is displayed for about 5 seconds.

- *For your safety, video is not displayed and only audio can be heard while driving.*

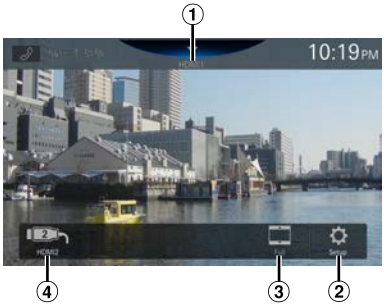

① Source Title
- The name which is given as the source name in "Setting the HDMI Name" (page 25) is displayed.

② Displays the HDMI Setup Menu screen (page 25)

③ Switching Display Modes

④ HDMI1/HDMI2 switch
- This switch appears when the HDMI Selector setting is [**On**]. See "Setting the HDMI Selector" (page 26). The switch name of HDMI1 becomes the same as the source title.

Switching the HDMI Input

When the optional HDMI Selector is connected, up to 2 HDMI devices can be connected. The HDMI devices can be switched during HDMI playback.

- *Make sure to set the HDMI Selector setting to [**On**]. See "Setting the HDMI Selector" (page 26).*
- *The displayed name of HDMI1 varies according to the HDMI Name setting. See "Setting the HDMI Name" (page 25).*

Touch [HDMI1 (or Digital TV)] or [HDMI2].

The current HDMI mode can be checked in the Source Title located in the upper part of the HDMI operation screen.

Switching Display Modes

You can switch the Display Mode while playing a Video File.

Touch the Display Mode button.

Each time you touch, the Display Mode is switched.
Full → Normal → Wide → Full

- *The Display Mode button displays the currently selected mode.*
- *You cannot operate them while driving.*

Wide:	Cut the top and bottom of the image and stretch it over the entire screen.
Full:	The mode displays a picture to fit its size vertically and horizontally with the monitor size.
Normal:	Select when viewing 4:3 images. A black band appears on both sides of the screen.

RSE through HDMI Out

- HDMI pass-through is automatically on:
  There is no setting that needs to be turned on.
- HDMI output is a pass-through only:
  Audio output though HDMI is not supported.
- HDMI Output will pass video through when source is on HDMI In, USB Video and Video content is available.
- To play video from a third party streaming device that third party manufacturer may require an adapter to do so.

Bluetooth Operation

Setup Before Using

About Bluetooth

Bluetooth is a wireless technology allowing communication between a mobile device or personal computer over short distances. This enables a hands-free call or data transmission between Bluetooth compatible devices. Bluetooth transmission is available in the unlicensed 2.4 GHz spectrum if the distance between devices is within 10 meters. For details, refer to the Bluetooth website (http://www.bluetooth.com/).

- *Depending on the Bluetooth version, a Bluetooth compatible device may not be able to communicate with this unit.*
- *Proper function of this unit with all Bluetooth compatible devices is not guaranteed. For handling of the Bluetooth compatible device, consult your Alpine dealer or Alpine website.*
- *Depending on the surroundings, Bluetooth wireless connection may be unstable.*
- *When you place a call, or perform setup operations, be sure to stop your car in a safe place.*
- *Depending on the connected Bluetooth compatible device(s), the function may differ. Also refer to the Owner's Manual of the connected device(s).*

About the Hands-free Phone

Hands-free calls are possible when using a HFP (Hands-Free Profile) compatible mobile phone with this unit.

- *Avoid performing a hands-free call in heavy traffic or on narrow or winding streets.*
- *Close the windows while calling to reduce background noise.*
- *If both calling parties are using hands-free devices, or the call is made in a noisy location, difficulty hearing the other person's voice is normal.*
- *Depending on telephone line conditions or certain mobile devices used, voices may sound unnatural.*
- *When using a microphone, speak as directly as you can into the microphone to obtain the best sound quality.*
- *Certain mobile phone features are dependent on the capabilities and settings of your service provider's network. Additionally, certain features may not be activated by your service provider, and/or the provider's network settings may limit the feature's functionality.*
  Always contact your service provider about feature availability and functionality.
  All features, functionality, and other product specifications, as well as the information contained in the Owner's Manual are based upon the latest available information and are believed to be accurate at the time of printing.
  Alps Alpine reserves the right to change or modify any information or specifications without notice or obligation.
- *Notice that when you connect an iPhone 6s or later/Android smartphone with installed Android Auto App, the operation screen may differ from this section.*

Before Using Bluetooth

Before using the hands-free phone/audio function, the following settings need to be made.

1 Set "Bluetooth" to [On] (page 20).

2 Register a Bluetooth device in this unit (page 17).

- *You can search for this unit using a Bluetooth compatible device, and then connect that Bluetooth compatible device to this unit. The device name of this unit is "iLX-507", "iLX-F509", "iLX-F511" or "i509" and the initial number of the passcode is "0000." Also refer to the Owner's Manual of the connected device(s).*

Hands-free Phone Control

Touch [ ] (Phone) in the HOME screen or Source mode screen to display the Phone menu screen.

- *The Device List screen is displayed when a Hands-free Phone, Apple CarPlay or Android Auto device is not connected.*

■ Phone menu screen example

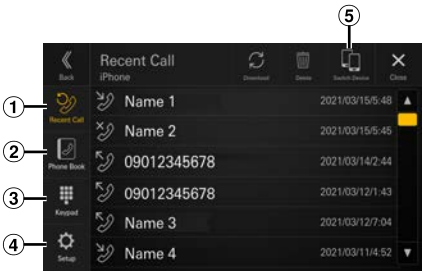

① Recent Call
You can display up to 90 items, such as phone numbers of the most recent incoming calls, missed calls and outgoing calls, and contact names that are registered in the Phone Book. When 90 items exist in the list, the oldest item is deleted when a further item is to be added.

② Phone Book
You can make a phone call from the Phone Book.

③ Keypad screen
Use to type a phone number.

④ Setup
Displays the Phone Setup Menu screen (page 26).

⑤ Switch Device
You can switch between Hands Free 1 and Hands Free 2.

Answering a Call

1 An incoming call triggers the ringtone and an incoming call display.

2 Touch [ ].

The call starts.

- *During a call, the audio for the current mode on the unit is muted. After calling, playback will resume.*
- *When the caller's number is transmitted to the system, if the caller's name is stored in the phone book, the name is displayed. If the name is not stored, the number is displayed.*
- *Touch [ ] (Decline) to reject an incoming call.*
- *By touching [ ], you can mute the microphone. To cancel MUTE mode, touch [ ]. For details, see "Phone Operation Screen" (page 60).*
- *When 2 Bluetooth compatible devices are connected, one is in a call and the other receives an incoming call, the screen indicates the incoming call. To answer the second call, hang up the first call, and then touch [ ] on the screen of this unit. Or you can answer the call directly with your Bluetooth compatible device.*

Hanging up the Telephone

Touch [ ] (End Call).

The call finishes.

Calling

Making a phone call using the Phone Menu

Making a phone call from the Recent Events list

1 Touch [Recent Call] on the Phone menu.

The Recent Call screen is displayed.

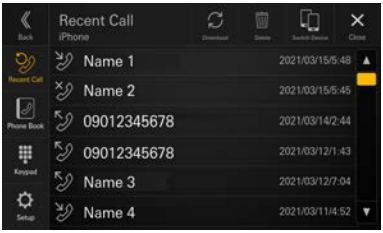

2 Touch the name of the contact you want to call.

The phone call is started.

Calling from the Phone Book

1 Touch [Phone Book] on the Phone menu.

The Phone Book screen appears.

2 Touch the name of the contact you want to call.

The Detail info screen is displayed.

3 Touch the phone number.

The phone call is started.

Entering a Phone Number to Make a Call

1 Touch [Keypad] on the Phone menu.

The number input screen (Keypad) appears.

Touch [⌫] to delete an entered number.

Touch **[Delete All]** to delete all entered numbers.

2 Enter the phone number you wish to call.

- You can enter up to 40 digits.

3 Touch [ ] (Call).

The phone call is started.

Phone Operation Screen

① Name or phone number

- If it is registered with a Group, the Group Name is also displayed. Although, depending on the connected mobile phone, it may not be displayed.

② Conversation time

Adjusting the Speech Volume

You can adjust Microphone Level.

Touch [–] or [+] of " ".

You can adjust the volume in 11 levels.

- *Microphone Level can also be adjusted in the Phone Setup screen. "Adjusting the Microphone Level" (page 26).*

Changing the Voice Output

The voice output for calls is switchable between car speakers and the mobile phone speaker.

Touch [ ] or [ ].

- *Depending on the mobile phone, this operation may not be possible.*

Muting the Microphone

Touch [ ].

- *To cancel MUTE mode, touch [ ].*

DTMF (Touch-Tone) Function

Transmits a DTMF (Touch-Tone) signals during a call.

1 Touch [ ] (Keypad).

The number input screen (Keypad) appears.

2 Input number.

- *You can transmit a Touch-Tone signal during a call.*
- *You cannot hear the DTMF (Touch-Tone) signal.*

Phone Book Function

■ Phone Book screen example

Searching in the Phone Book

The unit is provided with an alphabet search function for effective searching. When you use this function in the search mode, you can quickly search a name, etc. of the contact which you want to call.

1 Touch the initial search bar on the Phone Book screen and slide your finger up and down to align the bar with the target letter.

2 Touch the name of the contact you want to call.

The Detail info screen is displayed.

3 Touch the phone number.

The phone call is started.

- *If there are no names in the list beginning with that letter, the next letter of the alphabet is searched. For example: If there are no names beginning with "R," the search list begins with "S."*

Synchronizing the Phone Book

You can synchronize the system's phone book with the mobile phone's phone book.

Touch [ ] (Download) on the Phone Book screen.

Synchronization of the phone books starts.

- *You can store up to 2,000 registered name in the phone book.*
- *You can store up to 5 phone numbers by one person's name.*

Deleting the Phone Book Entries

1 Touch [ ] (Delete) on the Phone Book screen.

The confirmation screen is displayed.

2 Touch [OK].

All entries of the phone book are deleted.

Bluetooth Audio

If a Bluetooth compatible mobile phone, portable player, etc. is connected by wireless, you can play back a song (operation is controllable from the unit).

- *Operation may vary, depending on the Bluetooth compatible device.*

■ Bluetooth Audio main screen example

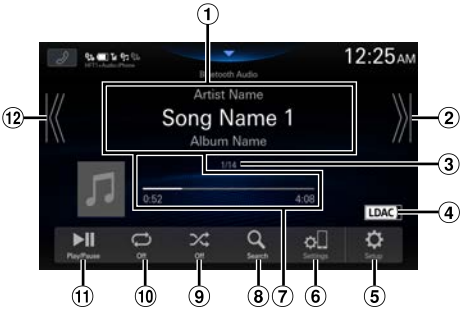

① Information display

② Finds the beginning of next chapter/Fast-forwards when touched for at least 1 second

③ Current track number/Total track number

④ Displays the audio codec information (SBC/AAC/LDAC)

⑤ Displays the BT Audio Setup Menu screen (page 27).

⑥ Displays the Device Setup Menu screen (page 17).

⑦ Elapsed time/Total time for playing

⑧ Displays the search screen

⑨ Shuffle mode

⑩ Repeat mode

⑪ Pause and Play

⑫ Finds the beginning of the current file/Finds a previous file within 3 seconds after playback starts/Fast-reverses when touched for at least 1 second

- *The displayed onscreen buttons may differ depending on the AVRCP version.*
- *To play back audio, a mobile phone or a portable player conforming to A2DP (Advanced Audio Distribution Profile) or AVRCP (Audio/Video Remote Control Profile) is required. Not all functions work with all devices.*
- *During a call, sound on the Bluetooth audio source is paused.*

Compatible AVRCP versions: 1.6

- *Available functions may differ depending on the AVRCP version.*

Playback

1 Press the ⊞ (HOME) button and select Bluetooth Audio mode.

The display shows the Bluetooth Audio mode screen.

- When the Bluetooth is set to [**Off**], the Bluetooth audio source icon will not be displayed. See "Setting the Bluetooth" (page 20).

2 Touch [⏮] or [⏭] to select the desired track (file).

Returning to the beginning of the current file:
Touch [⏮].

Fast backward the current file:
Touch and hold [⏮].

Advance to the beginning of the next file:
Touch [⏭].

Fast forward the current file:
Touch and hold [⏭].

- *The ⏮, ⏭ buttons provide the same functions above.*

3 To pause playback, touch [▶II].

Repeat Play

Touch [🔁] repeatedly to select Repeat Play mode.

Single Track 🔁1:	Only the track currently playing is repeatedly played back.
Group 🔁GRP:	Only files in a group are repeatedly played back.
All Tracks 🔁ALL:	Once all of the songs have finished playing, play back is repeated, starting with the first song.
Off 🔁:	Repeat mode is Off.

- *Operations may differ depending on the connected Bluetooth compatible device.*

Shuffle Play

Touch [⤮] to select Shuffle Play mode.

Group GRP ⤮ :	A Group is selected randomly and songs in the Group are played back in order. After all songs are played in the Group, the next Group is selected randomly.
All Tracks ALL ⤮ :	All songs in the Bluetooth compatible devices are played back in random sequence. Any one song does not play back again until all songs have been played back.
Off ⤮ :	Shuffle mode is Off.

- *Operations may differ depending on the connected Bluetooth compatible device.*

Searching for a Desired file

1 Touch [🔍] (Search).

2 Touch your desired Folder name or File name.

- *When you select a Folder name, repeat the same procedure to select another Folder name or File name.*

Connecting a Bluetooth Device

Registering a Bluetooth device in the unit enables automatic connection.
If it does not connect automatically, run through the connection procedure again.

1 Touch [⚙📱] (Settings).

The Device List screen is displayed.

2 Touch [Connect].

Bluetooth connection will start.

- *For details, see "Displaying Device List" (page 17).*

Disconnecting the Bluetooth Connection

1 Touch [⚙📱] (Settings).

The Device List screen is displayed.

2 Touch [Disconnect].

The Bluetooth connection is disconnected.

- *For details, see* "Disconnecting the Connected Device" *(page 18).*

Switching the connecting Bluetooth Device

If multiple Bluetooth devices are registered in this device, you can change the connection among the registered devices.

1 Touch [⚙📱] (Settings).

The Device List screen is displayed.

2 Select the function of the connecting device on the Function Select screen, and touch [OK].

The Function Select screen is displayed.

3 Select [Bluetooth Audio] in the Function Select screen, then touch [OK].

A check mark is displayed for the selected function.

The connection will transfer to the selected device.

- *For details, see "Connecting the Device Registered in the Device List" (page 18).*

TIDAL Operation (Optional)

To use TIDAL, it is necessary to connect to a Wi-Fi access point with a valid internet connection. For details, see "Setting the Wi-Fi Mode" (page 18) and "Connecting to Wi-Fi Access Point" (page 19).
Log in to TIDAL before using this feature. For details, see "Logging in to TIDAL" (page 64).

- For details on TIDAL, see the TIDAL website (https://tidal.com/).
- This unit does not support video playback.
- In areas with poor internet connectivity, it may take some time before a screen is displayed or playback starts. If the connection speed is slow, set the "Streaming Quality" setting (page 31) to "Normal".

■ TIDAL main screen example

① Displays the Favorite Select screen (page 67)

② Displays the Related Searches screen (page 67)

③ Information display
Playing List Name/Album Name/Song Name*/Artist Name

④ Time Bar (Elapsed time/Total time for playing)*

⑤ Finds the beginning of next track

⑥ MQA (Master Quality Authenticated) indicator
Green light: MQA
Blue light: MQA Studio

⑦ Displays the TIDAL Setup Menu screen (page 30)

⑧ Displays the search screen

⑨ Sound quality display
Displays the sound quality of the song being played.
MASTER/HIFI/HIGH or NORMAL

⑩ Displays the browsing list screen (page 66)

⑪ EXPLICIT indicator
Lights up when the lyrics contain obscene and explicit expressions.

⑫ Shuffle mode

⑬ Finds the beginning of the current track/Finds a previous file within 3 seconds after playback starts

⑭ Repeat mode

⑮ Pause and Play

⑯ Preset list
Recalls an item added to the preset list.
Touch for at least 2 seconds to memorize the URL of the current playlist as a preset list.

⑰ Artwork display

∗ The color of the Song Name and Time Bar changes depending on the sound quality.
– TIDAL Gold: MASTER quality
– TIDAL Cyan: HIFI quality
– White: HIGH or NORMAL quality

About MQA (Master Quality Authenticated)
This unit includes MQA Core Decoder, which unfolds the MQA stream once to deliver better than CD-quality. The first unfold recovers all the direct music-related information. Output is 88.2 kHz or 96 kHz.
The [MQA] indicator glows green or blue to indicate that the unit is decoding and playing an MQA stream, and denotes provenance to ensure that the sound is identical to that of the source material. It glows blue to indicate it is playing an MQA Studio stream, which has either been approved in the studio by the artist/producer or has been verified by the copyright owner.

Logging in to TIDAL

When using TIDAL for the first time, if your device authentication has expired or if you are logged out, you will need to log in to TIDAL.

1 Press the ⊞ (HOME) button and select TIDAL mode.

The TIDAL screen is displayed.

2 Touch [Link Account].

The login screen is displayed.

3 Scan the QR code with your iPhone or smartphone on the login screen and enter your user name and password on the login site.

If the login is successful, the TIDAL screen will be displayed.

- *If you access the TIDAL login site directly, it is necessary to enter the user code.*
- *When you touch [**Wi-Fi Setup**], the Wi-Fi Access Point List screen is displayed. For details, see "Connecting to Wi-Fi Access Point" (page 19).*

Playback

1 Press the ⊞ (HOME) button and select TIDAL mode.

The display shows the TIDAL mode screen.

2 Touch [⏮] or [⏭] or to select the desired track (file).

Returning to the beginning of the current (or previous) track:
Touch [⏮].

Advancing to the beginning of the next track:
Touch [⏭].

- *The ⏮, ⏭ buttons provide the same functions above.*
- *Touch or slide the Time Bar to fast-forward or fast-reverse. The message "Please wait" is displayed, then playback starts.*

3 To pause playback, touch [▶II].

Adding to the Preset List

You can add the URL of the current playlist to items in the preset list (mix, albums, artists, playlists, etc.).

1 Touch and hold the item in the preset list for at least 2 seconds.

The item is added to the preset list.

Initial preset list items:
My Mix, New Playlist, Recommended Playlist, Exclusive Playlist, New Albums, Recommended Albums, Top20 Albums, New Tracks, Recommended Tracks, Top20 Tracks, Favorite Albums, Favorite Tracks

- *If you save an item to a preset list in which it is already assigned, the item on the list is replaced with the newly assigned item.*

Recalling from the Preset List

1 Touch the desired item in the preset list.

The item list screen is displayed.

2 Select the desired tile (Playlist, Album, etc.).

The track list screen is displayed.

3 Select the desired tile.

The selected track is played back.

- *Touch [+**Add Preset**] to add the displayed content to the preset list. Touch the desired item on the Preset Select screen.*

Repeat Play

Touch [ ] or [ ] to select Repeat Play mode.

Single Track :	Only the track currently playing is repeatedly played back.
All Tracks :	Once all of the tracks have finished playing, play back is repeated, starting with the first track.

Shuffle Play

Touch [ ] to select Shuffle Play mode.

On :	Tracks in the selected category (playlist, album, etc.) are played back in random order.
Off :	Shuffle mode is Off.

- *If you touch [⏮] when the Shuffle mode is "On", a randomly selected track (or the beginning of the current track) is played back, so you may not be able to go back to the previous track.*

Search

You can search for a track, artist, etc. you want to listen to based on Featured, Genres, Moods, or Rising.

1 Touch [🔍] (Search) during playback.

The Browsing screen is displayed.

2 Touch [Featured], [Genres], [Moods], or [Rising].

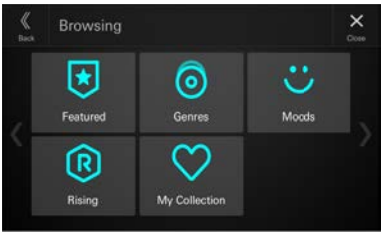

The search screen for the selected item is displayed.

3 Touch [Tracks], [Albums], [Playlists], or [Artists], and then select the desired tile.

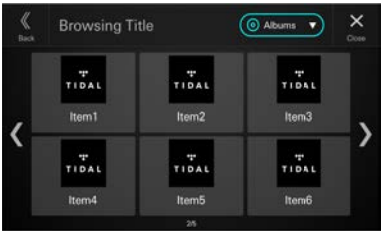

The selected track is played back.

- *Content with MASTER sound quality is indicated with "M" on the tile.*
- *Content with EXPLICIT expressions is indicated with "E" on the tile.*
- *Touch [+**Add Preset**] to add the searched content to the preset list. Touch the desired item on the Preset Select screen.*

Search from My Collection

You can search for items added to My Collection. To add to My Collection, see "Adding to Favorite Category" and "Adding to Playlists" (page 67).

1 Touch [🔍] (Search) during playback.

The Browsing screen is displayed.

2 Touch [My Collection].

The My Collection screen is displayed.

3 Touch [My Mix], [Created Playlists *1], [Favorite Playlists *2], [Albums], [Tracks] or [Artists].

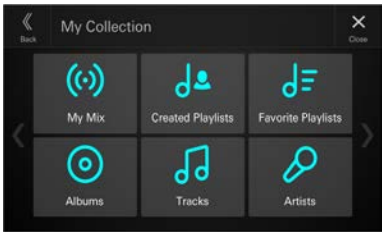

The search screen for the selected item is displayed.

*1 Created Playlists are playlists you created in the TIDAL app on your PC or smartphone.
*2 Favorite Playlists are TIDAL original playlists or playlists created by any user.

4 Select the desired tile.

The selected track is played back.

- *Content with MASTER sound quality is indicated with "M" on the tile.*
- *Content with EXPLICIT expressions is indicated with "E" on the tile.*
- *Touch [+**Add Preset**] to add the searched content to the preset list. Touch the desired item on the Preset Select screen.*

Displaying the Playlist

You can display the playlist being played.

1 Touch [☰] (Playing List) during playback.

The Playlist screen is displayed.

2 Select the desired tile.

The selected track is played back.

- *Content with MASTER sound quality is indicated with "M" on the tile.*
- *Content with EXPLICIT expressions is indicated with "E" on the tile.*
- *The track title being played is displayed in orange.*
- *Touch [+**Add Preset**] to add the displayed playlist to the preset list. Touch the desired item on the Preset Select screen.*

Adding to Favorite Category

You can add the track, album, playlist, or artist being played to My Collection.

1 Touch [♡] (Favorite Select) during playback.

The Favorite Select screen is displayed.

2 Touch [♫] (Track), [◎] (Album), [♫≡] (Playlist) or [🎤] (Artist) of "User Favorite".

The item being played is added to the corresponding item ("Tracks", "Albums", "Favorite Playlists", "Artists") in My Collection. If the item is added successfully, the selected button frame is highlighted.

- *The added items can be recalled through the My Collection search. For details, see "Search from My Collection" (page 66).*
- *You cannot delete items added to My Collection.*

Adding to Playlists

You can add the track being played to the playlist.

1 Touch [♡] (Favorite Select) during playback.

The Favorite Select screen is displayed.

2 Touch [♫] (Track) of "User Created Playlist".

The track being played is added to "Created Playlists" in My Collection. If the track is added successfully, the selected button frame is highlighted.

- *The added items can be recalled through the My Collection search. For details, see "Search from My Collection" (page 66).*
- *You cannot delete items added to My Collection.*

Search for Content Related to the Track Being Played

You can search for content (Track Radio, Album Browse) related to the track being played.

1 Touch [⚘] (Related search) during playback.

The Related Searches screen is displayed.

2 Touch [Track Radio] or [Album Browse].

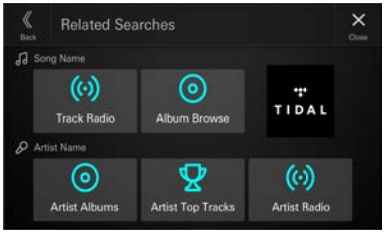

The track list screen is displayed.

3 Select the desired tile.

The selected track is played back.

- *Content with MASTER sound quality is indicated with "M" on the tile.*
- *Content with EXPLICIT expressions is indicated with "E" on the tile.*
- *Touch [+**Add Preset**] to add the searched content to the preset list. Touch the desired item on the Preset Select screen.*

Search for Content Related to the Artist Being Played

You can search for content (Artist Albums, Artist Top Tracks, or Artist Radio) related to the artist being played.

1 Touch [ ] (Related search) during playback.

The Related Searches screen is displayed.

2 Touch [Artist Albums], [Artist Top Tracks] or [Artist Radio].

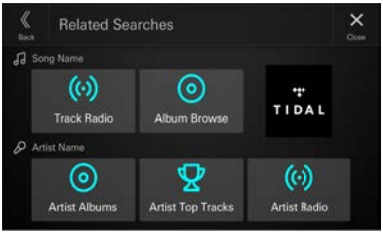

The list screen for the selected item is displayed.

3 Select the desired tile.

The selected track is played back.

- When you touch **[Artist Albums]**, the track list screen is displayed, select the desired tile.

- *Content with MASTER sound quality is indicated with "M" on the tile.*
- *Content with EXPLICIT expressions is indicated with "E" on the tile.*
- *Touch [+**Add Preset**] to add the searched content to the preset list. Touch the desired item on the Preset Select screen.*

Auxiliary Device (Optional)

⚠ WARNING

It is dangerous for the driver to watch video while driving the vehicle. The driver may be distracted from looking ahead and an accident could occur.

Install the unit correctly so that the driver cannot watch video unless the car is stopped and the parking brake is applied.

If the unit is not installed correctly, the driver will be able to watch video while driving and may be distracted from looking ahead and cause an accident. The driver or other people could be severely injured.

Operating Auxiliary Devices (Optional)

To operate devices connected to the AUX terminals of the unit, follow the procedure described below.

- *Set up the "AUX (Auxiliary) Setup" (page 24).*

1 Press the (HOME) button to select Auxiliary (AUX) mode.

The display shows the Auxiliary (AUX) mode screen.

2 During the Auxiliary (AUX) playback, touch and hold the screen to display the operation screen.

The Auxiliary (AUX) operation screen is displayed for about 5 seconds.

- *For your safety, video is not displayed and only audio can be heard while driving.*
- *For details on the connected auxiliary device, refer to its owner's manual.*

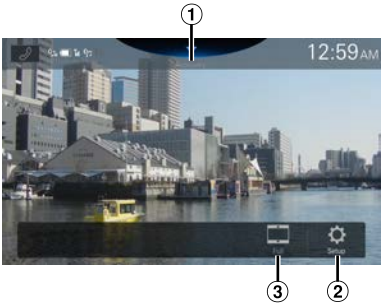

① Source Title
- The name which is given as the source name in "Setting the Auxiliary (AUX) Name" (page 25) is displayed.

② Displays the Auxiliary Setup Menu screen (page 24)

③ Switching Display Modes

Switching Display Modes

You can switch the Display Mode while playing a Video File.

Touch the Display Mode button.

Each time you touch, the Display Mode is switched.
Full → Normal → Wide → Full

- *The Display Mode button displays the currently selected mode.*
- *You cannot operate them while driving.*

Wide:	Cut the top and bottom of the image and stretch it over the entire screen.
Full:	The mode displays a picture to fit its size vertically and horizontally with the monitor size.
Normal:	Select when viewing 4:3 images. A black band appears on both sides of the screen.

Camera Operation (Optional)

When an optional camera is connected, the view of camera video can be output to the monitor.
Rear camera, Front camera (or Side camera, etc.) can be connected to this unit.
Make the Camera Select setting according to your connected camera. For details, see "Setting the Reverse Camera (Camera 1) (page 29)", "Camera 2 Setup" (page 29).

Rear camera:
If a rear camera is connected, when the vehicle is reversed, the rear camera view (guide marks for vehicle width and available distance) is displayed automatically on the screen of this unit.

Front camera:
If a front camera is connected, it can assist to check the condition in front of the car, such as when the road visibility is bad.

Side camera:
If a side camera is connected, it is helpful to check the condition of the road shoulder.

Other camera:
Set when connecting to a camera other than the Front camera or Rear camera, such as a room camera.

You can adjust the quality of the camera image.
Setting items: Brightness / Color / Contrast
See "Video Setup" (page 30).

Rear Camera Operation

Displaying the rear view video while the car is in reverse

1 Shift the gear lever to the reverse (R) position.

The rear view image is displayed while the car remains in reverse.

2 If you shift the gear lever to a position other than reverse (R), the monitor returns to the previous screen.

- *Never depend solely on the camera when backing up. Always turn and look and only use the camera for additional assistance.*
- *This function is effective when the reverse wire is properly connected.*
- *You can perform a Guide Adjustment for the rear view image. For details, see "Camera Guide Setup" (page 29).*

Displaying the Camera Image from the HOME screen

1 Press the ◎ (CAM) button.

The Camera view image is displayed.

2 Touch the screen when the image from the camera is displayed.

The operation screen is displayed on the screen.

3 Touch [Rear].

The Rear Camera view image is displayed.

- *Touch [✕] to return to the previous screen.*
- *You can perform a Guide Adjustment for the rear view image. For details, see "Camera Guide Setup" (page 29).*

Guide Display ON/OFF Setting

1 Touch the screen when the image from the camera is displayed.

The operation screen is displayed on the screen.

- After a 5-second time-out, the operation screen returns to the camera display screen.

2 Touch [Guide] on the Rear camera display screen.

The guide disappears, and then the [Guide] switch changes to [**Guide**].

3 Touch [Guide] to turn on the guide.

Adjusting the Caution Display Location

1 Touch the screen when the image from the camera is displayed.

The operation screen is displayed on the screen.

- After a 5-second time-out, the operation screen returns to the camera display screen.

2 Touch [Caution].

- *For each touch, the caution location moves to the top or bottom of the screen.*

Hitch Guide Display ON/OFF Setting

1 Touch the screen when the image from the camera is displayed.

The operation screen is displayed on the screen.

- After a 5-second time-out, the operation screen returns to the camera display screen.

2 Touch [Hitch] on the Rear camera display screen.

The hitch guide appears, and then the **[Hitch]** switch changes to [Hitch].

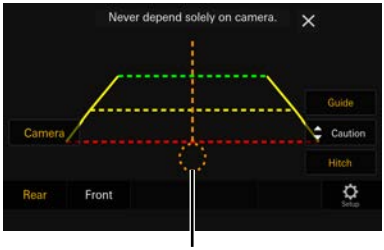

Hitch Guide

3 Touch [Hitch] to turn off the guide.

About the Rear Camera Guide

To display the guide, set "Guide Display ON/OFF Setting" (page 70) to On. Also, to adjust the guide, see Camera Guide Setup" (page 29).

■ Indication mark meaning

When the car is put into reverse gear, the monitor switches to the rear view camera image. Guides appear to help visualize the car's width and distance from the rear bumper.

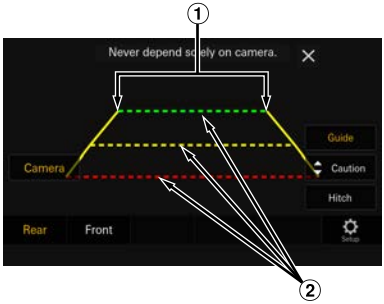

① Car width extension lines (red, yellow and green in order of distance)

If properly calibrated, the marks indicate the car's width. This helps guide the car's path when backing up in a straight line.

The marks represent the distance from the rear of the car (from the rear end of the bumper).

- The marks do not move in synchronization with the steering wheel.
- Set the marks to suit the car's width.

② Distance guidance lines

The marks represent the distance from the rear of the car (from the rear end of the bumper).

- The marks do not move in synchronization with the steering wheel.
- We recommend that you measure the actual distance to the marks when parked on a level surface.

- *Depending on the condition of the car or road surface, the range of vision may vary.*
- *The camera has a limited range of vision. Objects at extreme angles to the camera (e.g. under the bumper or at opposite ends of the bumper) may not be in the its field-of-vision.*
- *The rear camera image may have a tint which is different from the actual surroundings.*
- *Depending on the car, the guidance may deviate to the right or left. This is not a malfunction.*

■ Distance guidance mark

The distance guides represent the ground level distance from the rear bumper. It is difficult to accurately estimate the distance to objects above ground level.

In the following example, the distance to A is 0.5 m and the distance to B is 1 m.

<Screen>

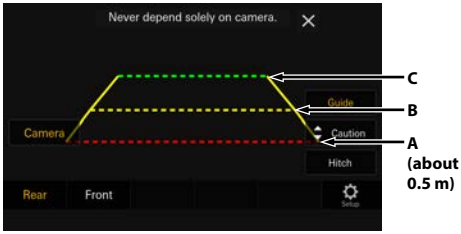

<Positions of A, B and C>

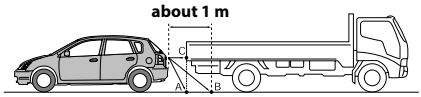

In the screen, according to the distance guidance marks, the truck seems to be parked about 1 m away (at the position B). In actual fact, however, if you reversed to position A, you would collide with the truck.

In the screen, positions A, B and C seem to be located in order of proximity. However, in actual fact, the position A and C are the same distance, and B is farther away than positions A and C.

- *The car width extension mark represents the distance to the road surface. The distance to an object on the road is not accurately represented by the guides.*

Error between the screen and the actual road surface

In the following conditions, errors are produced between the screen guidance and the actual road surface. (The illustrations represent a case when the camera is installed in the standard position.)

■ **When there is a steep upward slope behind the car (example)**

<Screen>

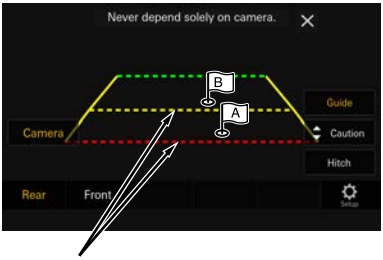

Distance guidance marks

<Situation of the car>

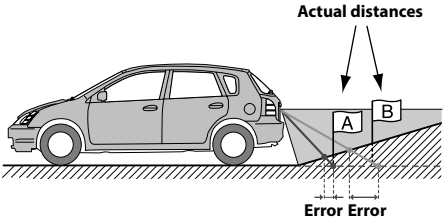

The distance guidance mark represents the distance to a flat road surface. Therefore in the case of an upward slope behind the car, the distance guides are displayed closer to the rear bumper than the actual distance. For example, if there is an obstacle on the upward slope, it may appear farther away than its actual position.

Also, an error may occur between the guidance and the actual path of the car on the road surface.

■ **When there is a steep downward slope behind the car (example)**

<Screen>

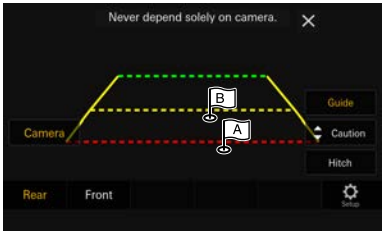

<Situation of the car>

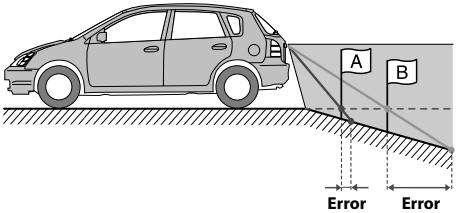

In the case of a downward slope behind the car, the distance guides are displayed farther from the rear bumper than the actual distance.

If there is an obstacle on the downward slope, it seems closer than its actual position.

Also, an error may occur between the guidance and the actual path of the car on the road surface.

Switching the Image Pattern for the Rear Camera

If the camera has a view switch function, the Direct Change switch is displayed.

1 Touch the screen when the image from the rear camera is displayed.

The operation screen is displayed on the screen.

- After a 5-second time-out, the operation screen returns to the camera display screen.

2 Touch [View].

3 Touch [Back], [Panorama], [Corner] or [Top].

The image pattern changes.

- *For detailed information about image patterns, see the camera Owner's Manual.*
- *You can perform a Guide Adjustment. For details, see "Camera Guide Setup" (page 29).*

Front Camera Operation

Displaying the Camera Image from the HOME screen

1 Press the ◎ (CAM) button.

The Camera view image is displayed.

2 Touch the screen when the image from the camera is displayed.

The operation screen is displayed on the screen.

3 Touch [Front].

The Front Camera view image is displayed.

- *Touch [✕] to return to the previous screen.*
- *You can perform a Guide Adjustment. For details, see "Camera Guide Setup" (page 29)*

Switching the Image Pattern for the Front Camera

If the camera has a view switch function, the Direct Change switch is displayed.

1 Touch the screen when the image from the front camera is displayed.

The operation screen is displayed on the screen.

- After a 5-second time-out, the operation screen returns to the camera display screen.

2 Touch [View].

3 Touch [Panorama], [Corner] or [Top].

The image pattern changes.

- *For detailed information about image patterns, see the camera Owner's Manual.*
- *You can perform a Guide Adjustment. For details, see "Camera Guide Setup" (page 29).*

About the adjustment of guide display ON/OFF setting and adjustment of Caution display location

As with the rear camera, the front camera guide display ON/OFF setting and Caution display location can be adjusted. See "Guide Display ON/OFF Setting" (page 70) and "Adjusting the Caution Display Location" (page 70) for the operations.

Side Camera Operation

Displaying the Side Camera image from the Menu screen

1 Press the ◎ (CAM) button.

The Camera view image is displayed.

2 Touch the screen when the image from the camera is displayed.

The operation screen is displayed on the screen.

3 Touch [Side].

The Side Camera view image is displayed.

- *Touch the screen while the camera image is being displayed, and touch [✕] to return to the previous screen.*
- *You can perform a Guide Adjustment. For details, see "Camera Guide Setup" (page 29).*

About the adjustment of guide display ON/OFF setting and adjustment of Caution display location

As with the rear camera, the side camera guide display ON/OFF setting and Caution display location can be adjusted. See "Guide Display ON/OFF Setting" (page 70) and "Adjusting the Caution Display Location" (page 70) for the operations.

iDataLink Operation

When the unit is connected to the car's iDataLink module, you can transfer and receive data between the car and the unit to check the car's status, or to make various operations from the unit.

- *An iDataLink module (sold separately) is required.*
- *Available functions differ depending on your vehicle. For details, refer to your vehicle's instruction manual.*

About Audio Interrupt

Audio Interrupt is the function that outputs sound from the unit when Voice Information (audio reading from the phone book, etc.)* from the vehicle occurs.

- *The Audio Interrupt function of the vehicle differs depending on the type and grade of the vehicle.*

* For your safety, when interrupted with Voice Information, you cannot operate the buttons on the front panel or the touch buttons on the display, except for some operations.
– The operating restrictions may differ depending on which mode the unit is in during Voice Information.
– You can use the **−** / **+** (DOWN/UP) button to control the volume of Voice Information.

Access to iDataLink Mode

You can check the car condition, control specific vehicle functions, etc.

1 Press the ⊞ (HOME) button to select Vehicle info. mode.

- The iDataLink mode screen is displayed.

2 Touch the desired tag on the top of the screen.

Select item:
Climate / Gauges / Park Sensor / Vehicle Info.

- The displayed tag options differ depending on the type of vehicle.

3 Adjust or confirm the item/information accordingly.

- *Operable functions and displays may differ depending on the vehicle.*

iDataLink Function Screen example

■ Climate screen example

You can control the temperature inside the vehicle, etc.

■ Gauges screen example

You can check the vehicle's speed, the engine's rotation speed, etc.

■ Parking sensor screen example

You can check the distance from the front and rear of the vehicle to an obstacle.

- *If the car sensor detects an obstacle, the screen automatically changes to the Parking sensor screen. For details, see "About Parking Sensor screen" (page 75).*

■ Vehicle Information screen example

You can check for open doors, check the tire pressure, the battery life, etc. for the vehicle.

■ iDataLink Setup screen example

Displays the iDataLink Setup Menu screen (page 27).

About Parking Sensor screen

The Parking sensor screen turns on when the front or rear sensor on your vehicle detects an obstacle within a certain distance.

Parking Sensor Full screen example

When the front or rear sensor detects an obstacle within a certain distance, the Parking Sensor screen is displayed, and the indicator that corresponds with that area lights up.

Indicator colors when an obstacle is detected.

Red: close distance
Orange: medium distance
Yellow: long distance

- *Depending on the speed of the vehicle, when moving faster than a certain speed, the Parking Sensor screen may not be displayed.*
- *Vehicles that do not have the obstacle detection sensor cannot use this function.*

Parking Sensor Camera interlock screen example (Rear camera)

You can check for obstacles through an interlocked camera image by connecting a Camera.

- *Touch the car icon to switch to the Parking sensor full screen. (Touch [**Back**] on the Parking Sensor full screen to return to the Parking Sensor Camera interlock display.)*
- *Touch the Camera image area to switch to the Camera full screen.*
  (While displaying the Camera full screen, touch the Camera screen, then touch [✕] to return to the Parking Sensor Camera interlock screen.)
- *Touch the car icon to switch to the Parking sensor full screen. (Touch [✕] on the Parking Sensor full screen to return to the Parking Sensor Camera interlock display.)*

Factory Media Operation

You can operate the Factory Audio (USB/iPod) from this unit.

- *The [**Factory Media**] button appears on the Home screen by making the OEM Media setting to [**On**]. For details, see "Setting the OEM Media" (page 27).*

Touch the ⊞ (HOME) button to select Factory Media mode.

The display shows the Factory Media mode screen.

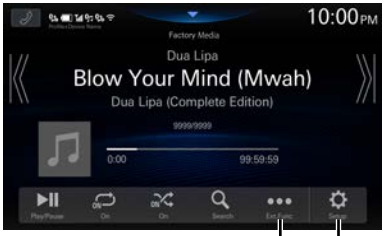

① Displays up to 15 labels obtained from iDataLink. A generic list, popup window, or current source screen is displayed by touching the Custom1 to 15 buttons. The screen that is displayed is determined by iDataLink.

② Displays the iDataLink Setup Menu screen (page 27).

- *For the basic operations on Factory Media mode, refer to "USB Audio" (page 45), "iPod mode on iPhone (Optional)" (page 49).*

Factory SiriusXM Operation

For certain vehicles equipped with OEM SiriusXM, you can operate the Factory SiriusXM from this unit.

- *The [**Factory SiriusXM**] button appears on the Home screen by making the OEM SXM setting to [**On**]. For details, see "Setting the OEM SXM" (page 27).*

Touch the ⊞ (HOME) button to select Factory SiriusXM mode.

The display shows the Factory SiriusXM mode screen.

① You can directly select the channel number by using the numeric keypad.

② Displays the channel guide obtained from iDataLink.

③ Changes to category browsing mode

④ Displays up to 15 labels obtained from iDataLink. A generic list, popup window, or current source screen is displayed by touching the Custom1 to 15 buttons. The screen that is displayed is determined by iDataLink.

⑤ Displays the iDataLink Setup Menu screen (page 27).

- *For the basic operations on Factory SiriusXM mode, refer to "SiriusXM Satellite Radio Operation (Optional)" (page 51).*

Dash Cam (Drive Recorder) Operation (Optional)

Operating Dash Cam (Optional)

Images from Dash Cam can be output to the monitor by connecting the optional Dash Cam.

- *The [Dash Cam] button appears on the Home screen by making the Driver Recorder Menu setting to [**On**]. For details, see "Dash Cam (Drive Recorder) Setup" (page 28).*

1 Press the ⊞ (HOME) button, then select Dash Cam mode.

The display shows the Dash Cam mode screen.

2 Touch and hold the screen when the image from the Dash Cam is displayed.

The operation screen is displayed on the screen.

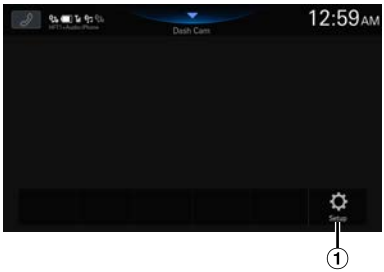

① Displays the Dash Cam Setup Menu screen (page 28)

- *Change the source to close the Dash Cam screen display.*

Information

Product Software Update

This product uses software that can be updated through a USB flash drive. Download the software from the Alpine website and update the product using the USB flash drive.

Updating this product

Check the Alpine website for details on updating.
https://www.alpine-usa.com

Important information on the software

About the software license of the product
The software installed in the product contains open-source software.
For details, refer to the "Open source licenses" screen on this unit. See "Displaying Software License" (*page 34*).

About the Supported Formats

About MP3/WMA/AAC/FLAC/WAV/APE

⚠ **CAUTION**

Except for private use, duplicating audio data (including MP3/WMA/AAC/FLAC/WAV/APE data) or distributing, transferring, or copying it, whether for free or for a fee, without permission of the copyright holder is strictly prohibited by the Copyright Act and by international treaty.

What is MP3?

MP3, whose official name is "MPEG Audio Layer 3," is a compression standard prescribed by the ISO, the International Standardization Organization and MPEG which is a joint activity institution of the IEC.

MP3 files contain compressed audio data. MP3 encoding is capable of compressing audio data at extremely high ratios, reducing the size of music files to as much as one-tenth their original size. This is achieved while still maintaining near CD quality. The MP3 format realizes such high compression ratios by eliminating the sounds that are either inaudible to the human ear or masked by other sounds.

What is WMA?

WMA, or "Windows Media™ Audio," is compressed audio data.
WMA is similar to MP3 audio data.

What is AAC?

AAC is the abbreviation for "Advanced Audio Coding," and is a basic format of audio compression used by MPEG2 or MPEG4.

What is FLAC?

FLAC (Free Lossless Audio Codec) is an audio file codec for lossless compression, developed and offered as open source software.
Codecs with lossy compression forms, such as MP3 and AAC, reduce part of the data to improve compression efficiency.
However, FLAC can reconstruct compressed data to be an identical copy of the original data by performing lossless compression. The compression ratio of FLAC is about 50%.

What is WAV?

WAV is a standard audio format for Windows. It is the original format before compression. You can enjoy music with almost the same sound quality as a CD. WAV is also known as WAVE.

What is APE?

APE is a format called lossless compression. It can be restored to its original quality by decoding. Mainly, it is used in "Monkey's Audio."

Method for creating MP3/WMA/AAC/FLAC/WAV/APE (USB Flash drive) files

Audio data is compressed using software with MP3/WMA/AAC/FLAC/WAV/APE (USB Flash drive) codecs. For details on creating MP3/WMA/AAC/FLAC/WAV/APE (USB Flash drive) files, refer to the user's manual for that software.
MP3/WMA/AAC/FLAC/WAV/APE (USB Flash drive) files that are playable on this device have the file extensions.
MP3: "mp3"
WMA: "wma"
AAC: "m4a"
FLAC: "flac"/"fla"
WAV: "wav"
APE: "ape"
WMA is not supported for the following files, Windows Media Audio Professional, Windows Media Audio 10 std or Windows Media Audio 10 Pro Lossless.

There are many different versions of the AAC format. Confirm that the software being used conforms to the acceptable formats listed above. It's possible that the format may be unplayable even though the extension is valid.
Playback of AAC files encoded by iTunes is supported.

Supported playback sampling rates and bit rates

MP3 (USB Flash drive)

Sampling rates:	8 kHz, 11.025 kHz, 12 kHz, 16 kHz, 22.05 kHz, 24 kHz, 32 kHz, 44.1 kHz, 48 kHz
Bit rates:	8 - 320 kbps

WMA (USB Flash drive)

Sampling rates: 8 - 48 kHz

Bit rates: 8 - 385 kbps

AAC (USB Flash drive)

Sampling rates: 16 - 48 kHz

Bit rates: 8 - 320 kbps

FLAC (USB Flash drive)

Sampling rates: 8 - 96 kHz

WAV (USB Flash drive)

Sampling rates: 8 - 96 kHz

APE (USB Flash drive)

Sampling rates: 8 - 48 kHz

This device may not play back correctly depending on sampling rates.

ID3 tags

This device supports ID3 tag. If tag data is in an MP3/WMA/AAC/FLAC/WAV/APE file, this device can display the title (track title), artist name, and album name ID3 tag data.
For non-supported characters, "?" is displayed.
The number of characters may be limited, or not correctly displayed, depending on the tag information.

Playing back MP3/WMA/AAC/FLAC/WAV/APE

MP3/WMA/AAC/FLAC/WAV/APE files are prepared, then written to a USB flash drive.

- Maximum numbers of playable files/folders
  USB Flash drive: 10,000 files/folders (including Root Folder)
- Largest playable file size: 512 MB

Playback may not be performed if a USB flash drive exceeds the limitations described above.
If a file/folder name is long, the maximum possible number of files may decrease.

- Both Audio and Video files are counted if their formats are playable on this unit.

Media supported

The media that this device can play back a USB flash drive.

Corresponding File Systems

This device supports FAT 16/32, exFAT.
The maximum nested folder depth is 8 (including the root directory). File names are limited to 256 characters (including the extension).
Valid characters for folder/file names are letters A-Z (all caps), numbers 0-9, and '_' (underscore).

Terminology

Bit rate

This is the "sound" compression rate specified for encoding. The higher the bit rate, the higher the sound quality, but also the larger the files.

Sampling rate

This value shows how many times per second the data is sampled (recorded). For example, music CDs use a sampling rate of 44.1 kHz, so the sound is sampled (recorded) 44,100 times per second. The higher the sampling rate, the higher the sound quality, but also the larger the volume of data.

Encoding

Converting music CDs, WAVE (AIFF) files, and other sound files into the specified audio compression format.

Tag

Song information such as track titles, artist names, album names, etc., written into MP3/WMA/AAC/FLAC/WAV/APE (USB flash drive) files.

Root folder

The root folder (or root directory) is found at the top of the file system. The root folder contains all folders and files. It is created automatically for all USB flash drives.

In Case of Difficulty

If you encounter a problem, please turn the power off, then on again. If the unit is still not functioning normally, please review the items in the following checklist. This guide will help you isolate the problem if the unit is at fault. Otherwise, make sure the rest of your system is properly connected, or then consult your authorized Alpine dealer.

Basic

No function or display.
- Vehicle's ignition is off.
  – If connected according to the instructions, the unit will not operate with the vehicle's ignition off.
- Improper power lead connections.
  – Check power lead connections.
- Blown fuse.
  – Check the fuse on the battery lead of the unit; replace with the proper value if necessary.

No sound or unnatural sound.
- Incorrect setting of volume/balance/fader controls.
  – Readjust the controls.
- Connections are not properly or securely made.
  – Check the connections and firmly connect.

Screen not displayed.
- Brightness/Contrast control is set at the minimum position.
  – Adjust the Brightness/Contrast control.
- Temperature in the vehicle is too low.
  – Increase the vehicle's interior temperature to operation temperature range.
- Connections to the Auxiliary Device are not securely made.
  – Check the connections and firmly connect.
- The Parking Brake Lead is not connected.
- The Parking Brake is not engaged.
  – Connect the Parking Brake Lead, then engage the Parking Brake.

Movement of displayed picture is abnormal.
- Temperature in the vehicle is too high.
  – Allow the vehicle's interior temperature to cool.

Radio

Unable to receive stations.
- No antenna, or open connection in the antenna cable.
  – Make sure the antenna is properly connected; replace the antenna or cable if necessary.

Unable to tune stations in the seek mode.
- You are in a weak signal area.
  – Make sure the tuner is in Seek mode.
- If the area you are in is a primary signal area, the antenna may not be grounded and connected properly.
  – Check your antenna connections; make sure the antenna is properly grounded at its mounting location.
- The antenna may not be the proper length.
  – Make sure the antenna is fully extended; if broken, replace the antenna with a new one.

Broadcast is noisy.
- The antenna is not the proper length.
  – Extend the antenna fully; replace it if it is broken.
- The antenna is poorly grounded.
  – Make sure the antenna is grounded properly at its mounting location.
- The station signal is weak and noisy.
  – If above solution does not work, tune in another station.

USB Audio

Unit does not operate.
- Condensation.
  – Wait a while (about 1 hour) for the condensation to dry.

Picture is unclear or noisy.
- Vehicle's battery power is weak.
  – Check the battery power and wiring.
  (The unit may malfunction if the battery power is under 11 volts with a load applied.)

Handsfree Phone

Ringtone is low
- Depending on your phone, the ringtone volume may be low, it is not a failure.

If this Message Appears

Various messages are displayed on the screen during operation. In addition to the messages telling you the current status or providing guidance for the next operation, there are also the following error messages. If one of these error messages is displayed, carefully follow the instructions in the solution column.

System

Unable to operate while driving.
- A setup operation, etc., was carried out while the vehicle was running.
  - Move the vehicle to a safe location, stop, and engage the parking brake, then carry out this operation.

USB Hub Unsupported.
- A USB flash drive with a hub is connected.
  - You cannot play back from a USB flash drive with a hub. USB hub connections are also not supported.

Audio/Visual

Unable to use connected USB device.
- An iPhone that is not supported by the unit is connected.
  - Connect an iPhone that is supported by the unit.
- A USB device that is not supported by the unit is connected.
  - Attempt to connect another USB flash drive.
- Communication error.
  - Turn the ignition key off, and then set to ON again.
  - Check the display by reconnecting between the iPhone and the unit, using the iPhone cable.
  - Check the display by reconnecting between the USB flash drive and the unit.
- Caused by the iPhone Software Version not being compatible with this unit.
  - Update the iPhone Software Version to be compatible with this unit.
- The iPhone is not verified.
  - Change to another iPhone.

SiriusXM

Channel Not Available
- This message may be shown when a channel is no longer available.
  - Tune to a different channel.

SAT Antenna Error
- The satellite antenna is disconnected or damaged.
  - Check the antenna connection to the SXM tuner, and check the antenna cable for damage.

No Satellite Signal
- SXM Tuner is not receiving a satellite signal.
  - Make sure that there are no obstructions to the satellite antenna, and that the antenna has a clear view of the southern sky.

SAT Hardware Error
- The radio is having difficulty communicating with the SiriusXM Connect Vehicle Tuner. The tuner may be disconnected or damaged.
  - Verify that the SiriusXM Connect Vehicle Tuner cable is securely connected to the radio.

HDMI

HDMI communication Error.
Please check your device and operate it again.
- The HDMI devices are not connected properly.
  - Remove the HDMI devices from the unit, and then reconnect them. Enable the output setting on the HDMI devices.

HDMI monitor communication error.
Please check the connection or ACC off / on.
- Connection error
  - Turn OFF/ON the engine (ACC), or check the HDMI connection cable of the HDMI compatible monitor.

Specifications

MONITOR SECTION

Screen Size	7″ (iLX-507)
	9″ (iLX-F509)
	11″ (iLX-F511)
	9″ (i509)
Operation System	TFT active matrix
Number of Picture Elements	
	2,764,800 pcs. (1280 × 720 × RGB)
Effective Number of Picture Elements	
	99% or more
Color system	NTSC / PAL
Illumination System	LED

FM TUNER SECTION

Tuning Range	87.7 – 107.9 MHz
Mono Usable Sensitivity	
	9.3 dBf (0.8 µV/75 ohms)
50 dB Quieting Sensitivity	
	13.5 dBf (1.3 µV/75 ohms)
Alternate Channel Selectivity	
	80 dB
Signal-to-Noise Ratio	65 dB
Stereo Separation	35 dB

AM TUNER SECTION

Tuning Range	530 – 1,710 kHz
Usable Sensitivity	25.1 µV/28 dBf

HD Radio SECTION

FM

Tuning Range	87.7 – 107.9 MHz
Usable Sensitivity	19 dB/µV
Stereo Separation	80 dB
Total Harmonic Distortion	
	0.08 % (at 1kHz)

AM

Tuning Range	530 – 1,710 kHz
Usable Sensitivity	21 dB/µV
Stereo Separation	75 dB
Total Harmonic Distortion	
	0.08 % (at 1kHz)

USB1 SECTION

USB requirements	USB 2.0
Max. Power Consumption	
	2,400 mA
USB Class	USB (Mass Storage Class)
File System	FAT16 / 32, exFAT
Number of Channels	2-Channels (Stereo)
Frequency Response*1	5 – 40,000 Hz (±1 dB)
Total Harmonic Distortion	
	0.005% (at 1 kHz)
Dynamic Range	95 dB (at 1 kHz)
Signal-to-Noise Ratio	95 dB
Channel Separation	90 dB (at 1 kHz)

*1 Frequency response may differ depending on the encoder software/bit rate.

USB2 SECTION

Max. Power Consumption	
	1,500 mA (CDP Support)
USB Class	Charge only

HDMI SECTION

Input Format	
HDMI:	720p / 480p / VGA
USB Video Files Supported:	
	MP4 / MOV / FLV / MKV
Output Format	
HDMI:	720p / 480p
USB Video Files Supported:	
	MP4 / MOV / FLV / MKV
	(HDMI input pass-though)

Bluetooth SECTION

Bluetooth Specification	Bluetooth V4.2 (2,402 - 2,480 MHz)
Output Power	+4.0 dBm/2.51 mW Max.
	(Power class 2)
Profile	HFP (Hands-Free Profile)
	OPP (Object Push Profile)
	PBAP (Phone Book Access Profile)
	SPP (Serial Port Profile)
	A2DP (Advanced Audio Distribution Profile)
	AVRCP (Audio/Video Remote Control Profile)

GPS SECTION

Reception Frequency	1575.42 + / - 1.023 MHz
Reception sensitivity (Search)	
	-136 dB max.

Wi-Fi SECTION

Frequency Ranges	IEEE 802.11 b/g/n (2.4 GHz)
	IEEE 802.11 a/n/ac (5 GHz)
Channels	1 – 11 ch (2.4 GHz)
	149 – 165 ch (5 GHz)
Security Protocols	WPA3 / WPA2-PSK (TKIP, AES)

GENERAL

Power Requirement	14.4 V DC
	(11–16 V allowable)
Operating temperature	-4°F to +140°F
	(-20°C to + 60°C)
Power Output	18 W RMS × 4 *2

*2 Primary amplifier ratings per CEA-2006 Standard

- Power output: measured at 4 Ohms and ≤ 1% THD+N
- S/N: 80 dBA (reference: 1 W into 4 Ohms)

Maximum Current Consumption

15 A

Audio output level

Preout (Front, Rear):	4V/10k ohms (max.)
Preout (Subwoofer):	4V/10k ohms (max.)
Weight	1.4 kg (3 lbs. 2 oz) (iLX-507)
	2.3 kg (5 lbs. 2 oz) (iLX-F509)
	2.6 kg (5 lbs. 12 oz) (iLX-F511)
	1.6 kg (3 lbs. 9 oz) (i509)

CHASSIS SIZE

	iLX-507	iLX-F509	iLX-F511	i509
Width	178 mm (7 1/8")	178 mm (7 1/8")	178 mm (7 1/8")	178 mm (7 1/8")
Height	50 mm (2")	50 mm (2")	50 mm (2")	50 mm (2")
Depth	149.6 mm (6")	149.6 mm (6")	149.6 mm (6")	142 mm (5 5/8")

DISPLAY SIZE

	iLX-507	iLX-F509	iLX-F511	i509
Width	171 mm (6 3/4")	232.5 mm (9 1/4")	268.9 mm (10 5/8")	215.5 mm (8 1/2")
Height	96 mm (3 7/8")	151.1 mm (6")	178 mm (7 1/8")	133.8 mm (5 3/8")
Depth	17.7 mm (23/32")	54.7 mm (2 1/4")	54.7 mm (2 1/4")	37.8 mm (1 1/2")

- *Due to continuous product improvement, specifications and design are subject to change without notice.*
- *The LCD panel is manufactured using an extremely high precision manufacturing technology. Its effective pixel ratio is over 99.99%. This means that there is a possibility that 0.01% of the pixels could be either always ON or OFF.*

ANATEL

Music Halo iLX-507/iLX-F509/iLX-F511/i509
ALPS ALPINE CO., LTD.
FEITO NA TAILANDIA
"Este equipamento não tem direito à proteção contra interferência prejudicial e não pode causar interferência em sistemas devidamente autorizados".
11536-22-14207

Para consultas, visite: www.anatel.gov.br

Installation and Connections

Before installing or connecting the unit, please read the following and pages 8 to 10 of this manual thoroughly for proper use.

⚠ WARNING

DO NOT DISASSEMBLE OR ALTER.

Doing so may result in an accident, fire or electric shock.

KEEP SMALL OBJECTS SUCH AS SCREWS OUT OF THE REACH OF CHILDREN.

Swallowing them may result in serious injury. If swallowed, consult a physician immediately.

USE THE CORRECT AMPERE RATING WHEN REPLACING FUSES.

Failure to do so may result in fire or electric shock.

DO NOT BLOCK VENTS OR RADIATOR PANELS.

Doing so may cause heat to build up inside and may result in fire.

USE THIS PRODUCT FOR MOBILE 12V APPLICATIONS.

Use for other than its designed application may result in fire, electric shock or other injury.

MAKE THE CORRECT CONNECTIONS.

Failure to make the proper connections may result in fire or product damage.

USE ONLY IN CARS WITH A 12 VOLT NEGATIVE GROUND.

(Check with your dealer if you are not sure.) Failure to do so may result in fire, etc.

BEFORE WIRING, DISCONNECT THE CABLE FROM THE NEGATIVE BATTERY TERMINAL.

Failure to do so may result in electric shock or injury due to electrical shorts.

DO NOT ALLOW CABLES TO BECOME ENTANGLED IN SURROUNDING OBJECTS.

Arrange wiring and cables in compliance with the manual to prevent obstructions when driving. Cables or wiring that obstruct or hang up on places such as the steering wheel, gear lever, brake pedals, etc. can be extremely hazardous.

DO NOT SPLICE INTO ELECTRICAL CABLES.

Never cut away cable insulation to supply power to other equipment. Doing so will exceed the current carrying capacity of the wire and result in fire or electric shock.

DO NOT DAMAGE PIPE OR WIRING WHEN DRILLING HOLES.

When drilling holes in the chassis for installation, take precautions so as not to contact, damage or obstruct pipes, fuel lines, tanks or electrical wiring. Failure to take such precautions may result in fire.

DO NOT USE BOLTS OR NUTS IN THE BRAKE OR STEERING SYSTEMS TO MAKE GROUND CONNECTIONS.

Bolts or nuts used for the brake or steering systems (or any other safety-related system), or tanks should NEVER be used for installations or ground connections. Using such parts could disable control of the vehicle and cause fire etc.

DO NOT INSTALL IN LOCATIONS WHICH MIGHT HINDER VEHICLE OPERATION, SUCH AS THE STEERING WHEEL OR SHIFT LEVER.

Doing so may obstruct forward vision or hamper movement etc. and results in serious accident.

DO NOT INSTALL THE MONITOR NEAR THE PASSENGER SEAT AIR BAG.

If the unit is not installed correctly the air bag may not function correctly and when triggered the air bag may cause the monitor to spring upwards causing an accident and injuries.

⚠ CAUTION

HAVE THE WIRING AND INSTALLATION DONE BY EXPERTS.

The wiring and installation of this unit requires special technical skill and experience. To ensure safety, always contact the dealer where you purchased this product to have the work done.

USE SPECIFIED ACCESSORY PARTS AND INSTALL THEM SECURELY.

Be sure to use only the specified accessory parts. Use of other than designated parts may damage this unit internally or may not securely install the unit in place. This may cause parts to become loose resulting in hazards or product failure.

ARRANGE THE WIRING SO IT IS NOT CRIMPED OR PINCHED BY A SHARP METAL EDGE.

Route the cables and wiring away from moving parts (like the seat rails) or sharp or pointed edges. This will prevent crimping and damage to the wiring. If wiring passes through a hole in metal, use a rubber grommet to prevent the wire's insulation from being cut by the metal edge of the hole.

DO NOT INSTALL IN LOCATIONS WITH HIGH MOISTURE OR DUST.

Avoid installing the unit in locations with high incidence of moisture or dust. Moisture or dust that penetrates into this unit may result in product failure.

Precautions

- Be sure to disconnect the cable from the (–) battery post before installing your unit. This will reduce any chance of damage to the unit in case of a short-circuit.
- Be sure to connect the color coded leads according to the diagram. Incorrect connections may cause the unit to malfunction or damage to the vehicle's electrical system.
- When making connections to the vehicle's electrical system, be aware of the factory installed components (e.g. on-board computer). Do not tap into these leads to provide power for this unit. When connecting the unit to the fuse box, make sure the fuse for the intended circuit of the unit has the appropriate amperage. When in doubt, consult your Alpine dealer.
- The unit uses female RCA-type jacks for connection to other units (e.g. amplifier) having RCA connectors. You may need an adaptor to connect other units. If so, please contact your authorized Alpine dealer for assistance.
- Be sure to connect the speaker (–) leads to the speaker (–) terminal. Never connect left and right channel speaker cables to each other or to the vehicle body.

Accessory List

■ iLX-507

Main unit 1
Quick Reference Guide 1set

<Cables>

Power cable 1
GPS Antenna 1
Antenna mounting plate 1
Cable clamp for antenna 1set
USB extension cable 1
PRE OUT cable 1
Microphone 1
CAMERA cable 1
REMOTE cable 1

<Main unit mounting parts>

Face Plate 1
HDMI Bracket 1
Flush head screw (M5×8) 4
Screw (M5×8) 4

■ iLX-F509/iLX-F511

Main unit 1
Display unit 1
Quick Reference Guide 1set

<Cables>

Power cable 1
GPS Antenna 1
Antenna mounting plate 1
Cable clamp for antenna 1set
PRE OUT cable 1
Microphone 1
CAMERA cable 1
REMOTE cable 1

<Main unit mounting parts>

HDMI Bracket 1
Flush head screw (M5×8) 4
Screw (M5×8) 4

<Display unit mounting parts>

Cover Rear 1
Cover Hinge 1
Power Plate 1
Sheet Rear (2×50) 2
Sheet Rear (2×35) 2
Sheet Rear (2×20) 4
Sheet Hinge 2
Sheet cap 2
Screw (M5×8) 4
Screw (M3×4) 2
Screw Bind (M2.6×6) 2

■ i509

Main unit 1
Display unit 1
Quick Reference Guide 1set

<Cables>

Display cable 1
GPS Antenna 1
Antenna mounting plate 1
Cable clamp for antenna 1set
PRE OUT cable 1
Microphone 1

<Main unit mounting parts>

HDMI Bracket 1
Flush head screw (M5×8) 4
Screw (M5×8) 4

Installation

Mounting (iLX-F509/iLX-F511 only)
Consult "Position Adjustment and Mounting Dimensions of the Display" (page 86) in advance so that this unit does not obstruct your field of vision or impair driving when mounted.

Caution

- Do not block the unit's fan, thus preventing air circulation. If blocked, heat will accumulate inside the unit and may cause a fire.

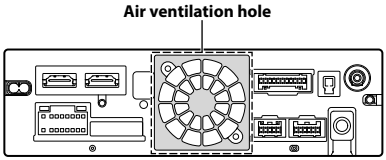

Rear of the Unit

- When installing the display unit and main unit, do not touch the connectors with your hands. (iLX-F509/iLX-F511 only)

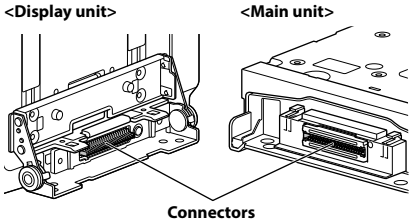

Caution concerning the installation location

Angle of installation

Install at an angle between horizontal and 30°. Note that installing at an angle outside of this range will result in a loss of performance and possibly damage.

■ **iLX-507**

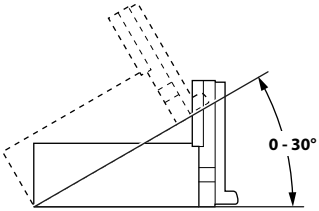

■ **iLX-F509/iLX-F511**

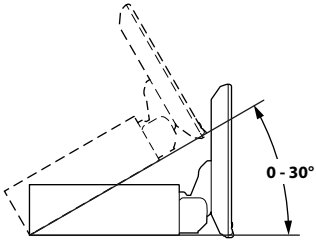

Mounting the Microphone

For safe use, make sure of the following:

- Location is stable and firm.
- Does not interfere with safety equipment.
- Driver's view and operations are not obstructed.
- Microphone is located where the driver's voice can be easily picked up.

When you speak into the microphone, you should not have to change your driving posture. This may cause a distraction, taking your attention away from safely driving your vehicle. Carefully consider direction and distance while mounting the microphone. Confirm that the driver's voice can be easily picked up at the selected location.

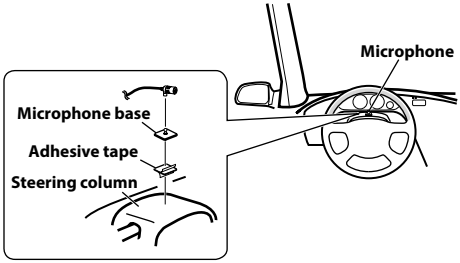

Mounting the GPS Antenna inside the vehicle

1 Clean the mounting location.

2 Put on the GPS Antenna mounting plate.

3 Mount the GPS Antenna.

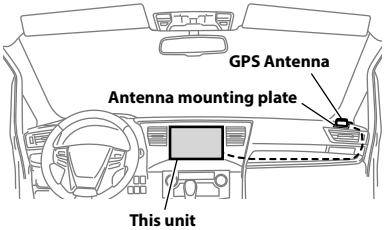

- *Do not mount the GPS Antenna inside the center console.*
  - *Mount the GPS Antenna on a flat plane of the dash board or rear tray.*
  - *Make sure the GPS Antenna is not covered (obstructed) by any metallic surface or object.*
- *If the GPS Antenna is mounted near the unit, the reception becomes poor, and the location of your vehicle may not be displayed correctly.*
  - *Mount the GPS Antenna far away enough from the unit.*
  - *Bundle the GPS Antenna cable away from the rear of the unit.*
- *Some thermal reflection type or thermal absorption type glass may interrupt high frequency waves. If reception is poor with the antenna installed inside the car, try to mount the antenna outside the car.*

Note on using HDMI Connection Cables

When using HDMI connection cables, secure the cables to the HDMI Terminals with the supplied HDMI Fixation Bracket.

Secure the HDMI Fixation Bracket with the screw (A).

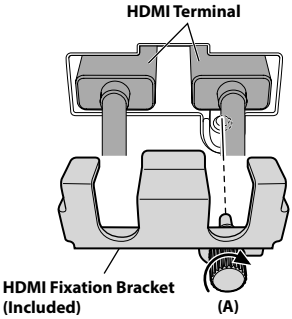

Position Adjustment and Mounting Dimensions of the Display (iLX-F509/iLX-F511 only)

The mounting position of this unit's Display can be adjusted (front-back/angle). When mounting the Display, confirm the mounting position and mounting dimensions so that it does not obstruct your field of vision or impair driving.

⚠ WARNING

- In the following cases, the display cannot be mounted.
  - It impairs operation of the steering wheel or various levers (gearshift, windshield wiper switch, turn signal switch, etc.)
  - It impairs operation of the airbag
  - It significantly impairs operation of the hazard switch
  - It impairs identification or operation of any other control switches
  - It impairs confirmation of gauges or warning indicators
  - It interferes with vehicle equipment (switches, panels, etc.)

∗ Depending on the vehicle, the glove compartment or cup holders may become inaccessible, or air conditioner ventilation ducts may be covered.

■ Display mounting dimensions and adjustable positions

Front-back position

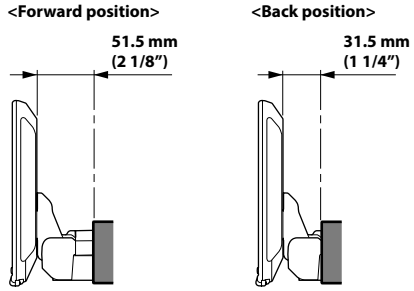

Adjustable Display angle

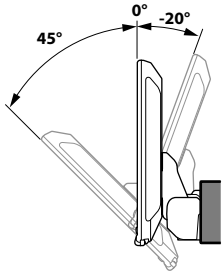

- *To adjust the display angle, hold the center of the top and bottom of the display to move it. To protect the display, do not hold the left and right ends to move it.*

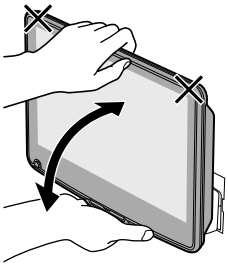

> ⚠ **CAUTION**
>
> **Do not adjust the display angle when the display unit is not fixed to the slider of the main unit using 4 screws (M5×8). Doing so may not turn power on.**

Adjustable Display up-down position

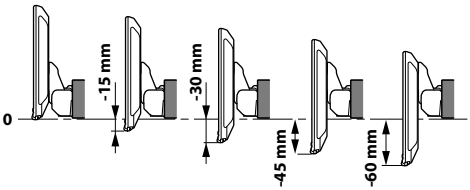

Adjusting the display position (iLX-F509/iLX-F511)

Depending on the vehicle, the front-back display position differs. To adjust the front-back position, set the slider to the forward position.

Default setting: Back position

1 Remove 4 hexagon bolts from both sides of the unit.

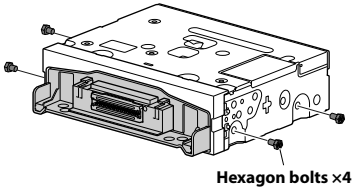

2 Pull out the slider to the forward position. (To return the slider to the back position, push it in.)

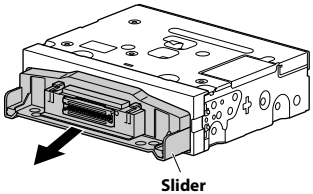

3 Install 4 hexagon bolts to secure the slider.

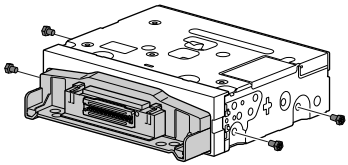

Installation example using the Original Mounting Bracket

1 Mount the original mounting bracket to the unit using the supplied screws.

- If you do not have the original mounting bracket, mount the Double din KIT* (provided with the side mounting bracket), etc. to the main unit.

* Sold separately.

■ iLX-507

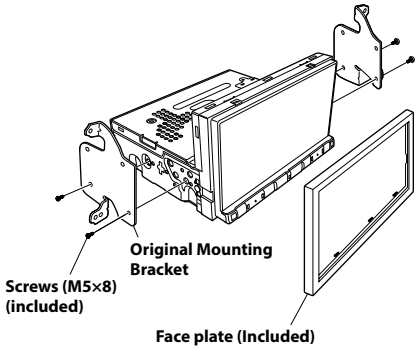

■ iLX-F509/iLX-F511

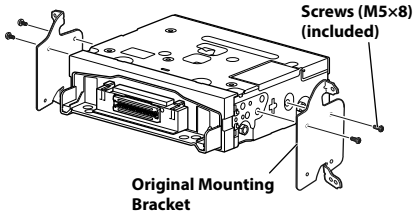

2 Connect all other leads of the unit according to details described in the "Connections" (page 90).

3 Mount the unit in a car.

- Fix the cables carefully. Do not damage them by mounting them into movable parts, such as the seat rail, or by locating them against sharp or pointed edges.

4 Reattach the removed vehicle parts (panels, etc.) or other aftermarket dash kit back onto the vehicle.

Adjust the up-down position of the Display unit (iLX-F509/iLX-F511)

Adjust the up-down position of the display according to the mounting position on the vehicle before mounting the display unit.

Default setting: 0 mm

1 Remove the 4 screws on the rear of the display unit, then adjust the up-down position.

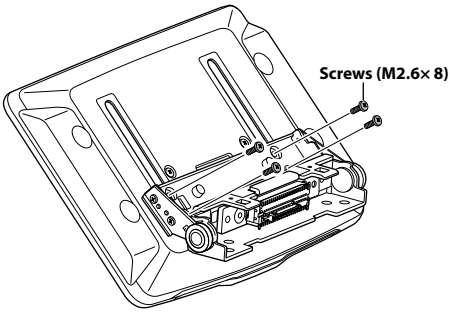

2 Attach the Sheet Rear in a position that aligns with the up-down position of the display unit.

Sheet Rear (Included)	up-down position
2×50 mm:	for up-down position 0 mm or -60 mm
2×35 mm:	for up-down position -15 mm or -45 mm
2×20 mm:	for up-down position -30 mm

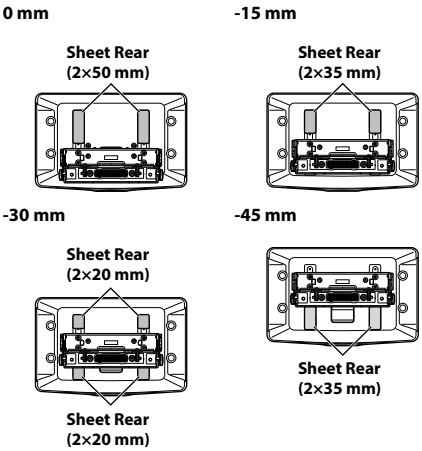

-60 mm

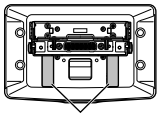

Sheet Rear
(2×50 mm)

3 **Attach the Cover Rear to the rear of the display unit using 2 screws (M2.6×6). Secure the screws, then attach the Sheet caps.**

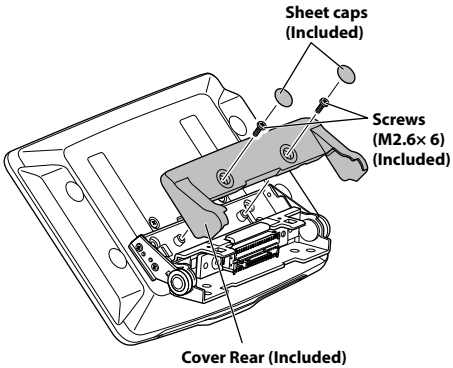

Install the display unit (iLX-F509/ iLX-F511)

1 **Fix the Display unit to the slider of the main unit using 4 screws (M5×8).**

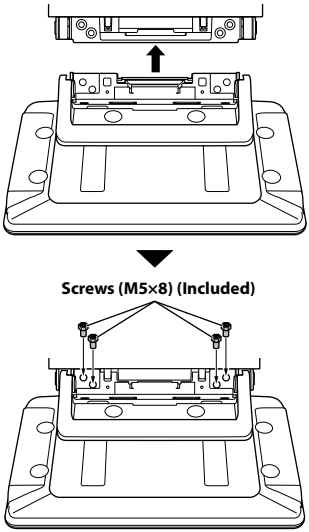

⚠ **CAUTION**

Do not adjust the display angle when the display unit is not fixed to the slider of the main unit using 4 screws (M5×8). Doing so may not turn power on.

2 **Mount the Power Plate.**

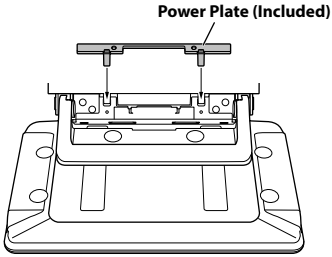

- **If the Power Plate is not mounted, the display unit may not be turned power on. Make sure to mount it.**

3 **Mount the Cover Hinge using 2 screws (M3×4). Secure the screws, then attach the Sheet Hinge.**

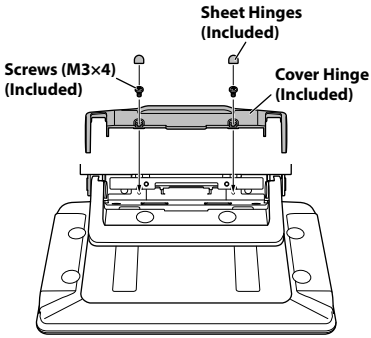

Connection 1

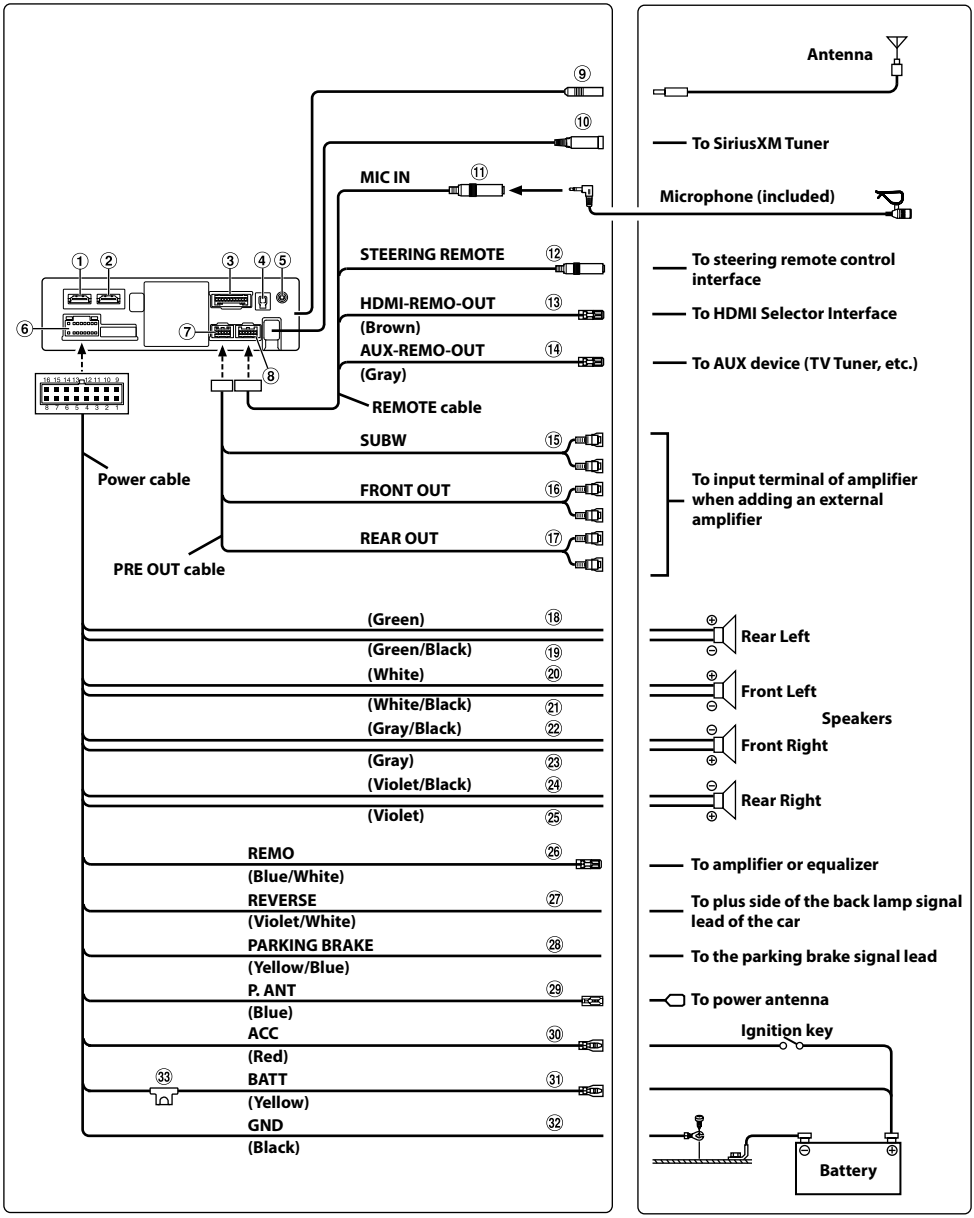

Connection 2

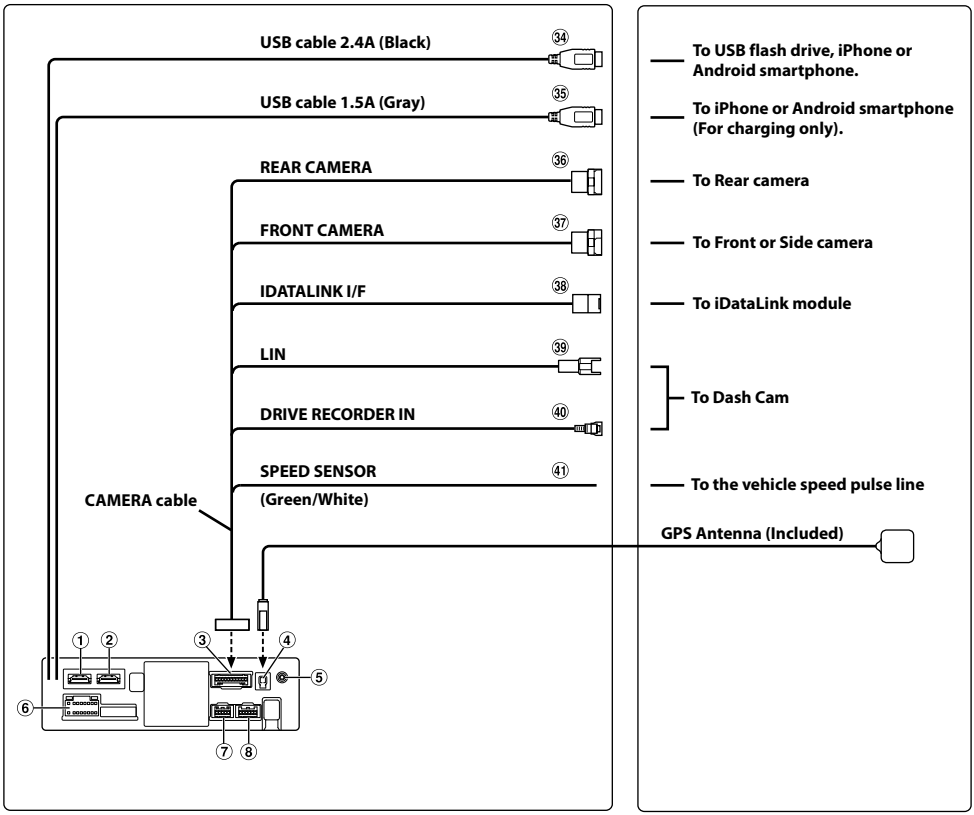

① HDMI Input Connector

② HDMI Output Connector

③ CAMERA Connector

④ GPS Antenna Receptacle
Connect to GPS antenna (Included).

⑤ AUX Input Connector
Input lead for AUX audio signal.

⑥ Power Supply Connector

⑦ PRE OUT Connector

⑧ REM Connector

⑨ Radio Antenna Receptacle

⑩ SiriusXM Tuner Input Connector
To SiriusXM Tuner (sold separately).
- For more information on how to install the SiriusXM Connect Vehicle tuner, consult the installation guide included with the tuner.

⑪ MIC Input Connector
To microphone (included).

⑫ Steering Remote Control Interface Connector
To steering remote control interface.
For details about connections, consult your nearest Alpine dealer.

⑬ HDMI-REM-OUT Lead (Brown)
Connect this lead to the remote input lead of your HDMI Selector Interface.

⑭ AUX-REM-OUT Lead (Gray)
Connect this lead to the remote input lead of your AUX device.

⑮ Subwoofer RCA Connectors
RED is right and WHITE is left.

⑯ Front Output RCA Connectors
Can be used as Front Output RCA Connectors. RED is right and WHITE is left.

⑰ Rear Output RCA Connectors
Can be used as Rear Output RCA Connectors. RED is right and WHITE is left.

⑱ Left Rear (+) Speaker Output Lead (Green)

⑲ Left Rear (–) Speaker Output Lead (Green/Black)

⑳ Left Front (+) Speaker Output Lead (White)

㉑ Left Front (–) Speaker Output Lead (White/Black)

㉒ Right Front (–) Speaker Output Lead (Gray/Black)

㉓ Right Front (+) Speaker Output Lead (Gray)

㉔ Right Rear (–) Speaker Output Lead (Violet/Black)

㉕ Right Rear (+) Speaker Output Lead (Violet)

㉖ Remote Turn-On Lead (Blue/White)
Connect this lead to the remote turn-on lead of your amplifier or signal processor.

㉗ Reverse Lead (Violet/White)

㉘ Parking Brake Lead (Yellow/Blue)
Connect this lead to the power supply side of parking brake switch to transmit the parking brake status signals to the unit.

㉙ Power Antenna Lead (Blue)
Connect this lead to the +B terminal of your power antenna, if applicable.
* This lead should be used only for controlling the vehicle's power antenna. Do not use this lead to turn on an amplifier or a signal processor, etc.

㉚ Switched Power Lead (Ignition) (Red)
Connect this lead to an open terminal on the vehicle's fuse box or another unused power source that provides (+) 12V only when the ignition is turned on or in the accessory position.

㉛ Battery Lead (Yellow)
Connect this lead to the positive (+) post of the vehicle's battery.

㉜ Ground Lead (Black)
Connect this lead to a good chassis ground on the vehicle.
Make sure the connection is made to bare metal and is securely fastened using the sheet metal screw provided.

㉝ Fuse Holder (15A)

㉞ USB Connector (2.4A)
To USB flash drive, iPhone or Android smartphone.

㉟ USB Connector (1.5A)
To iPhone or Android smartphone (For charging only).

㊱ REAR CAMERA Input Connector
Use when connecting a rear camera.

㊲ FRONT CAMERA Input Connector
Use when connecting a front camera or side camera.

㊳ iDataLink Interface Connector
To iDataLink module (sold separately).

㊴ LIN Connector
Connect this lead to the LIN connector of the Dash Cam.

㊵ Drive Recorder Input Connector
Input lead for Dash Cam video signal.

㊶ Speed Sensor Lead (Green/White)
Improper connection of the speed pulse line may cause important safety features of the vehicle to fail (such as the brakes or air bags). Such failures may result in an accident and loss of life. We strongly recommend that the installation be performed by a trained, authorized Alpine dealer.

Usable AV/RCA Interface Cable (4-pole mini AV plug to 3-RCA)

Wiring convention of this system is as follows;

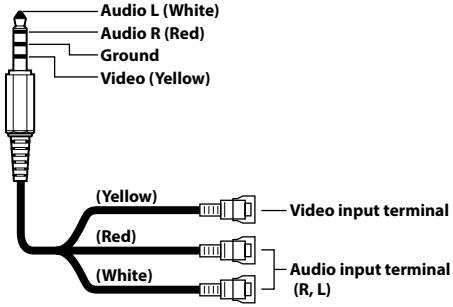

• *Configuration commercially available 4-pole mini AV plugs is not standardized.*

If an ACC power supply is not available

Connection Diagram of SPST Switch (sold separately)

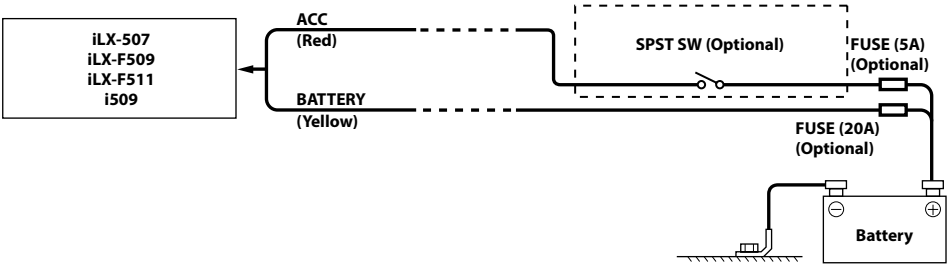

- *If your vehicle has no ACC power supply, add an SPST (single-pole, single-throw) switch (sold separately) and fuse (sold separately).*
- *The diagram and the fuse amperage shown above are in the case when the unit is used individually.*
- *If the switched power (ignition) lead of the unit is connected directly to the positive (+) post of the vehicle's battery, the unit draws some current (several hundred milliamperes) even when its switch is placed in the OFF position, and the battery may be discharged.*

To prevent external noise from entering the audio system.

- Locate the unit and route the leads at least 10 cm (4") away from the car harness.
- Keep the battery power leads as far away from other leads as possible.
- Connect the ground lead securely to a bare metal spot (remove any paint, dirt or grease if necessary) of the car chassis.
- If you add an optional noise suppressor, connect it as far away from the unit as possible. Your Alpine dealer carries various noise suppressors, contact them for further information.
- Your Alpine dealer knows best about noise prevention measures so consult your dealer for further information.

System Example

Connection of an iPhone

■ **When connecting to an iPhone with a Lightning connector**

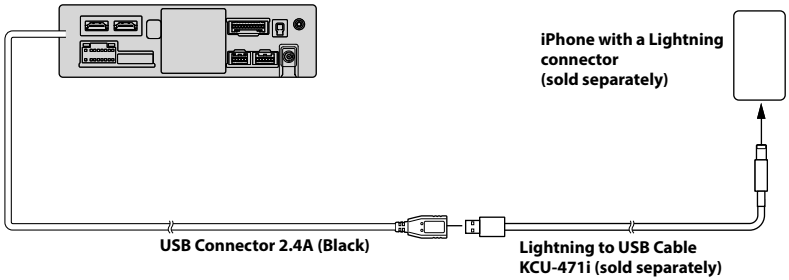

- *Do not leave an iPhone in a vehicle for a long time. Heat and humidity may damage the iPhone, and you may not be able to play it again.*

Connection of a USB Flash Drive

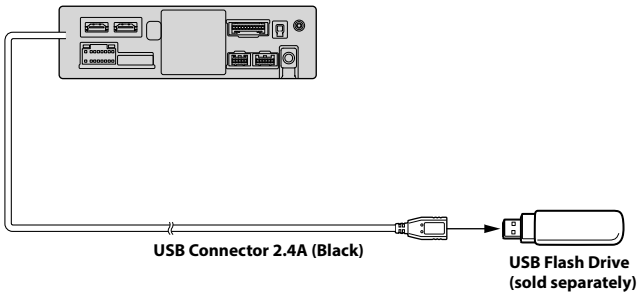

- *Do not leave a flash drive in a vehicle for a long time. Heat and humidity may damage the flash drive.*

Connection of an HDMI Device (iPhone with a Lightning connector)

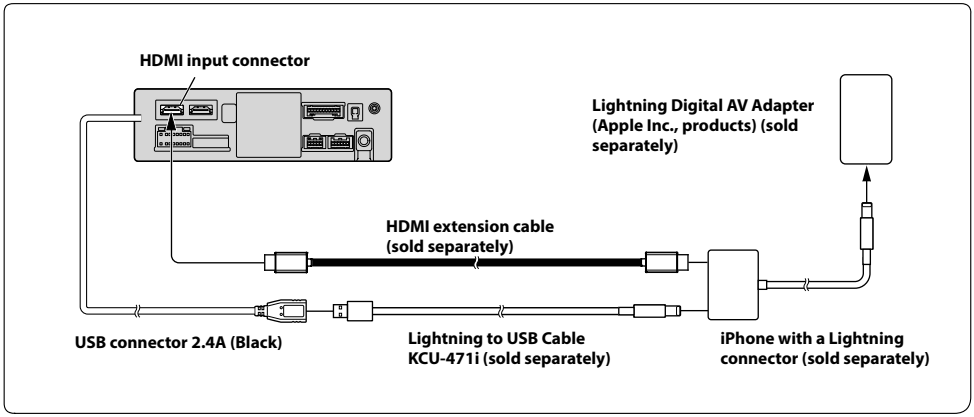

Connection of an HDMI Device (Android device)

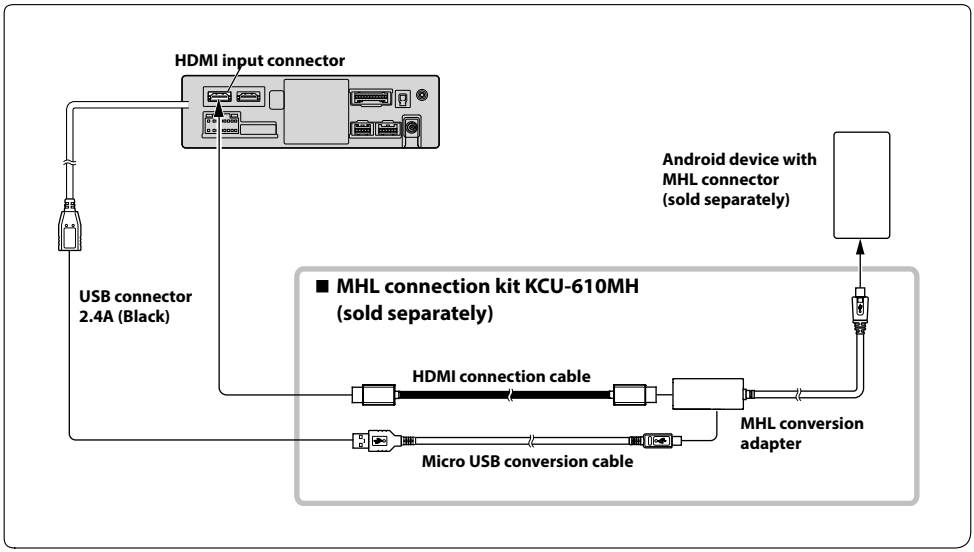

- *A connection kit or adapter kit suitable for the type of terminal on the connecting device is required.*

Connection of an HDMI Device (using HDMI SELECTOR INTERFACE)

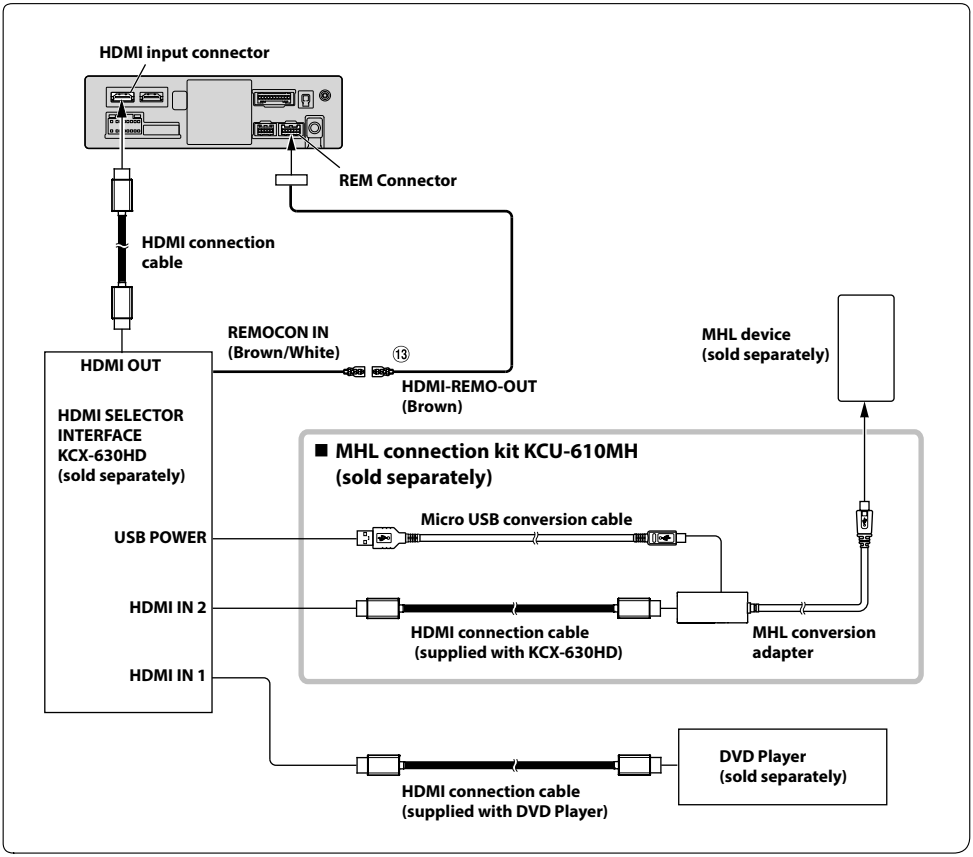

⑬ HDMI-REM-OUT Lead (Brown)

- *A connection kit or adapter kit suitable for the type of terminal on the connecting device is required.*

Connection of an External Device

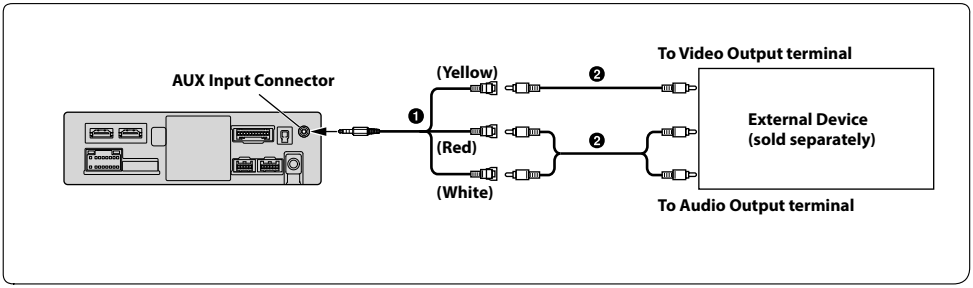

❶ AV/RCA Interface Cable (4-pole mini AV plug to 3-RCA) (sold separately)

❷ RCA Extension Cable (sold separately)

- *You can change the name of an external device. For details, refer to "Setting the Auxiliary (AUX) Name" (page 25).*

Connection of an External Amplifier

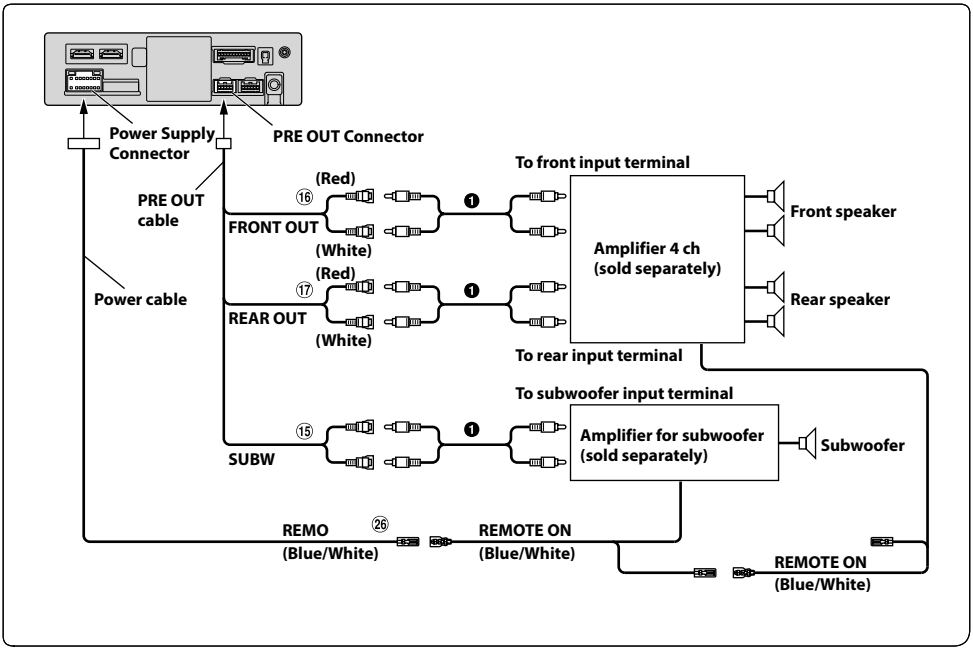

⑮ Subwoofer RCA Connectors

⑯ Front Output RCA Connectors

⑰ Rear Output RCA Connectors

㉖ Remote Turn-On Lead (Blue/White)

❶ RCA Extension Cable (sold separately)

Connection of a Camera

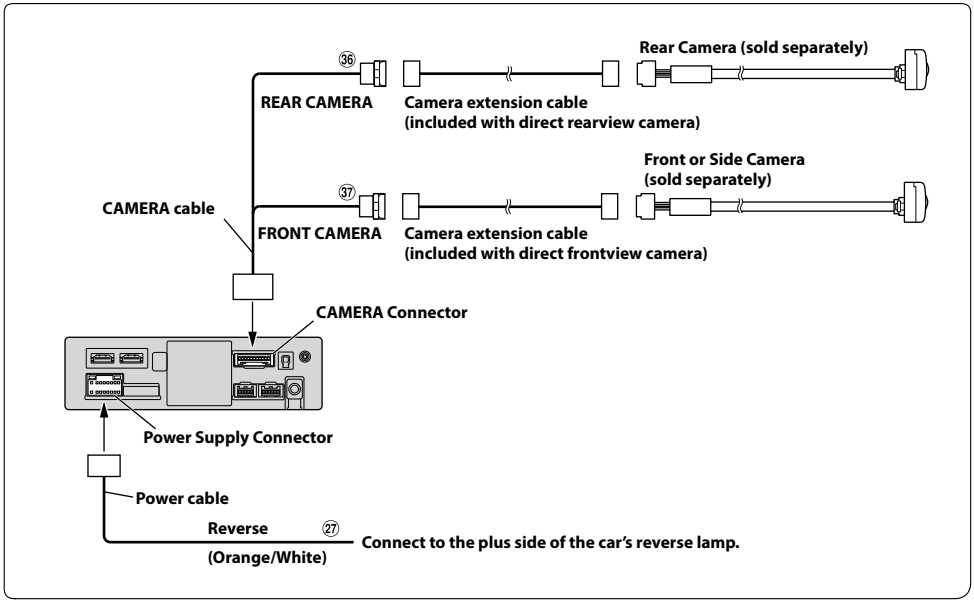

㉗ Reverse Lead (Orange/White)

㊱ REAR CAMERA Input Connector

㊲ FRONT CAMERA Input Connector

Connection of a Dash Cam

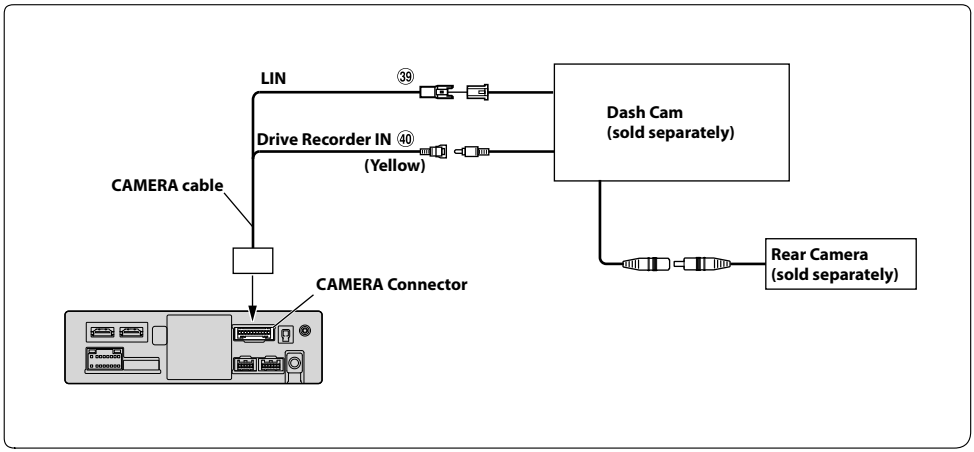

㊴ LIN Connector

㊵ Drive Recorder Input Connector

LIMITED WARRANTY

● PRODUCTS COVERED:

This Limited Warranty ("Limited Warranty") covers Alpine Car Audio Products and· Related Accessories (the "Product"). Products purchased in Canada are covered only in Canada. Products purchased in the U.S.A. are covered only in the U.S.A.

● LENGTH OF WARRANTY:

This Warranty is in effect for one year (1) from the date of the original retail purchase on the Product.

● WHO IS COVERED:

This Warranty only covers the original purchaser of the Product, who must reside in the United States, Puerto Rico or Canada.

● WHAT IS COVERED:

This Warranty covers defects in materials or workmanship (parts and labor), under normal use, in the Product.

● WHAT IS NOT COVERED:

This Limited Warranty does not cover the following:

① Damage occurring during shipment of the Product to Alpine for repair (claims must be presented to the carrier).
② Damage caused by normal wear and tear, accidents or abuse, including burned voice coils caused by over-driving the speaker (amplifier level is turned up and driven into distortion or clipping). Speaker mechanical failure (e.g. punctures, tears or rips). Cracked or damaged LCD panels. Dropped or damaged hard drives.
③ Damage caused by negligence, misuse, improper operation or failure to follow instructions contained in the Owner's manual.
④ Damage caused by an act of God, including without limitation, earthquake, fire, flood, storms or other acts of nature. Any cost or expense related to the removal or reinstallation of the Product.
⑤ Service performed by an unauthorized person, company or association.
⑥ Any Product which has the serial number defaced, altered or removed.
⑦ Any Product which has been adjusted, disassembled, altered or modified without Alpine's consent.
⑧ Any Product not distributed by Alpine within the United States, Puerto Rico or Canada.
⑨ Any Product not purchased from an Authorized Alpine Dealer.

● HOW TO OBTAIN WARRANTY SERVICE:

① You are responsible for delivery of the Product to an Authorized Alpine Service Center or Alpine for repair and for payment of any initial shipping charges. Alpine will, at its option, repair or replace the Product with a new or reconditioned product without charge. If the repairs are covered by this Limited Warranty, and if the Product was shipped to an Authorized Alpine Service Center or Alpine, Alpine will pay the return shipping charges. The repaired or replaced Product will continue to be covered under the original Limited Warranty period.
② You should provide a detailed description of the problem(s) for which service is required.
③ You must supply proof of your purchase of the Product.
④ You must package the Product securely to avoid damage during shipment. To prevent lost packages, it is recommended to use a carrier that provides a tracking service.

● HOW WE LIMIT IMPLIED WARRANTIES:

ANY IMPLIED WARRANTIES INCLUDING FITNESS FOR A PARTICULAR PURPOSE AND MERCHANTABILITY ARE LIMITED IN DURATION TO THE PERIOD OF THE EXPRESS WARRANTY SET FORTH ABOVE AND NO PERSON OR THIRD PARTY IS AUTHORIZED TO ADD TO, MODIFY, OR EXTEND THE TERMS OF THIS LIMITED WARRANTY AND/OR ASSUME FOR ALPINE ANY OTHER LIABILITY IN CONNECTION WITH THE SALE OF THE PRODUCT.

● HOW WE EXCLUDE CERTAIN DAMAGES:

TO THE MAXIMUM EXTENT PERMITTED BY APPLICABLE LAW, ALPINE AND ITS PARENT COMPANY, AFFILIATES, AND SUBSIDIARIES EXPRESSLY DISCLAIM LIABILITY TO YOU UNDER ANY THEORY OF LIABILITY FOR ALL INCIDENTAL, INDIRECT DAMAGES, SPECIAL, PUNITIVE, AND CONSEQUENTIAL DAMAGES WHICH MAY BE INCURRED BY YOU IN RELATION TO THE PRODUCT. THE TERM INCIDENTAL DAMAGES INCLUDES, BUT IS NOT LIMITED TO, COSTS AND EXPENSES OF TRANSPORTING THE PRODUCT TO THE ALPINE SERVICE CENTER, LOSS OF THE ORIGINAL PURCHASER'S TIME, LOSS OF THE USE OF THE PRODUCT, BUS FARES, CAR RENTALS OR OTHER COSTS RELATING TO THE CARE AND CUSTODY OF THE PRODUCT. THE TERM CONSEQUENTIAL DAMAGES INCLUDES, BUT IS NOT LIMITED TO, THE COST OF REPAIRING OR REPLACING OTHER PROPERTY WHICH IS DAMAGED WHEN THIS PRODUCT DOES NOT WORK PROPERLY. TO THE EXTENT PERMITTED BY APPLICABLE LAW, THIS LIMITED WARRANTY AND THE REMEDIES PROVIDED HEREUNDER ARE EXCLUSIVE AND IN LIEU OF ALL OTHERS. TO THE MAXIMUM EXTENT PERMITTED BY APPLICABLE LAW, THE TOTAL LIABILITY OF ALPINE, ITS PARENT COMPANY, AFFILIATIES, AND SUBSIDIARIES IN CONNECTION WITH THIS LIMITED WARRANTY AND/OR THE PRODUCT SHALL NOT EXCEED THE AMOUNT YOU ACTUALLY PAID FOR THE PRODUCT.

● HOW STATE/PROVINCIAL LAW RELATES TO THE LIMITED WARRANTY:

This Limited Warranty gives you specific legal rights, and you may also have other rights which vary from state to state and province to province. In addition, some states/provinces do not allow limitations on how long an implied warranty lasts, and some do not allow the exclusion or limitation of incidental or consequential damages.
Accordingly, limitations as to these matters contained herein may not apply to you.

If any of the terms of this Limited Warranty are held to be null, void, illegal or unenforceable for any reason, the remaining terms of this Limited Warranty will remain in full force and effect.

For warranty service in the Canadian market, contact:
Phone: (905) 513-7733 Fax: (905) 513-7740
Email: info@gentec-intl.com
Or visit our website at http://www.alpine-canada.com

● HOW TO CONTACT CUSTOMER SERVICE:

Should the Product require service, please call the following number for your nearest Authorized Alpine Service Center.

CUSTOMER SERVICE	**1-800-421-2284, ext. 860304**
TECH SUPPORT	**1-800-TECH-101 (1-800-832-4101)**

Or visit our website at http://www.alpine-usa.com

This Limited Warranty is provided by ALPINE ELECTRONICS OF AMERICA, INC., whose principal office is at 1500 Atlantic Blvd, Auburn Hills, MI 48326, U.S.A.
Do not send Products to this address.
Call the toll-free telephone number or visit the website to locate a service center.

About the Rules of Bluetooth Electromagnetic Radiation Regulation

USA/Canada	**FCC/IC CAUTION** This device complies with part 15 of FCC Rules and Innovation, Science and Economic Development Canada's licence-exempt RSS(s). Operation is subject to the following two conditions: (1) this device may not cause harmful interference, and (2) this device must accept any interference received, including interference that may cause undesired operation. Changes or modifications not expressly approved by the party responsible for compliance could void the user's authority to operate the equipment. This equipment complies with FCC/ ISED radiation exposure limits set forth for an uncontrolled environment and meets the FCC radio frequency (RF) Exposure Guidelines and RSS-102 of the ISED radio frequency (RF) Exposure rules. This equipment should be installed and operated keeping the radiator at least 20cm or more away from person's body. This transmitter must not be co-located or operated in conjunction with any other antenna or transmitter.
	Le présent appareil est conforme à la partie 15 des règles de la FCC et aux normes des CNR d'Innovation, Sciences et Développement économique Canada applicables aux appareils radio exempts de licence. L'exploitation est autorisée aux deux conditions suivantes : (1) l'appareil ne doit pas produire de brouillage, et (2) l'appareil doit accepter tout brouillage subi, même si le brouillage est susceptible d'en compromettre le fonctionnement. Cet équipement est conforme aux limites d'exposition aux rayonnements énoncées pour un environnement non contrôlé et respecte les règles les radioélectriques (RF) de la FCC lignes directrices d'exposition et d'exposition aux fréquences radioélectriques (RF) CNR-102 de l' ISDE Cet équipement doit être installé et utilisé en gardant une distance de 20 cm ou plus entre le radiateur et le corps humain.

Don't forget to take a moment to protect your purchase by registering your product now at the following address: www.alpine-usa.com/registration.

N'oubliez pas de consacrer un moment à la protection de votre achat en enregistrant votre produit dès maintenant à l'adresse suivante : www.alpine-usa.com/registration.

Recuerde que con solo unos pocos pasos podrá proteger su producto, registrándolo a través de la siguiente dirección: www.alpine-usa.com/registration.